GK-14

PRODUCT MANUAL

Motor power: 400 W
Battery capacity: 18 V / 6 Ah
Charging time: 2-3h
Building time: 6-20 hours
Max load: 50kg
Net weight: 30kg
Run time: 1 hour

Beyond Play

The Innovator Kit

CONTENTS

1 ..... Contents

2-4 ..... Warning

5-36 ..... Assembly steps

37 ..... Diagram

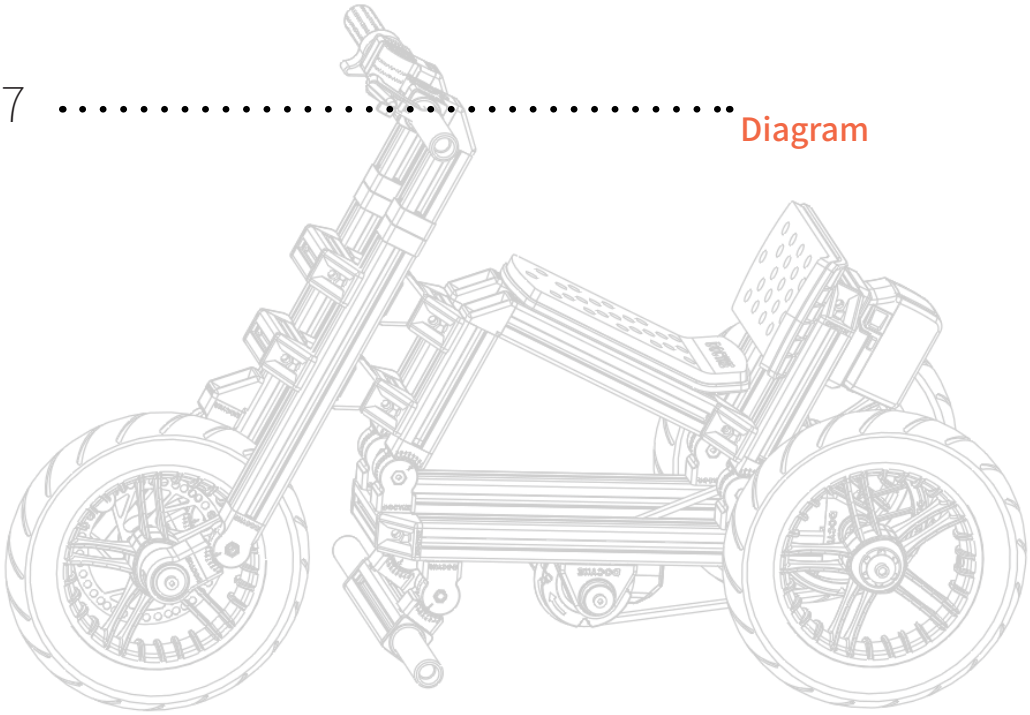

Please read this instruction manual and all warnings before assembly.
For more information, visit our website: www.beyondplay.me

WARNING!

Please assemble and use under adult supervision.

WARNING:

This product should be assembled and used under adult supervision. Parents should review all of the following warnings and instructions in advance, and make sure that all riders understand all warnings, cautions, instructions and safety topics, and that young riders are able to use this product safely and responsibly. We recommend that you review and reinforce the information in this manual periodically with younger riders, and that you inspect and maintain your ride to ensure its safety.

The rides and all the parts have been tested by official independent testing agencies. We shall not be responsible or liable, directly or indirectly, in any way for any personal injury or product damage caused by non-compliance with the terms and conditions in our manuals.

Usage guidelines

1. Check frequently to make sure all parts are still firmly tightened and functioning properly.
2. Never exceed the maximum load or the maximum tightening torque (25 N·m). You can find the maximum load for each ride in our manual.
3. Avoid streets, and avoid excessive exposure to sunlight, water, sand, gravel and other debris that will shorten the life of your ride.
4. Avoid sharp bumps, drainage grates and sudden surface changes. Ride on smooth, paved surfaces.
5. Small parts present a choking hazard to children under the age of three. Take care during unpacking and assembly to ensure that all small parts and plastic bags are accounted for and kept out of the reach of children.
6. Dirt, leaves and other debris can damage, shrink, expand or weaken the parts. Keep your ride in a dry environment.
7. Most components are specially designed. Please do not mix them with similar parts on the market.
8. Check the air pressure in the tires: maximum 1.8 bar.
9. Dress appropriately. Do not wear loose clothing or jewelry. Keep your hair, clothing and gloves away from moving parts so that they do not get caught.
10. Use personal protective equipment. Always wear protective equipment such as non-skid safety shoes and a safety helmet.
11. Disconnect the battery pack from the ride before making any adjustments, changing accessories or storing it.

Electrical safety warning

Read all safety warnings and all instructions. Failure to follow the warnings and instructions may result in electric shock, fire or serious injury.

1. Use the charger indoors only. Keep the work area clean and well lit. Do not expose the product to rain or wet conditions.
2. Recharge only with the charger and battery pack specifically designated by the manufacturer.
3. When the battery is not in use, keep it away from other metal objects. Shorting the battery terminals together may cause burns or a fire.
4. Do not open the battery or the charger: danger of short-circuiting. Protect the battery against heat (for example, continuous intense sunlight), fire, water and moisture: danger of explosion.

RECOMMENDED TOOLS

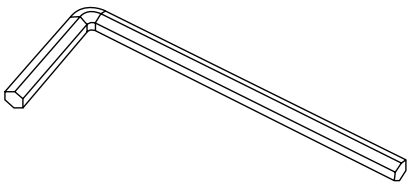

Hex key

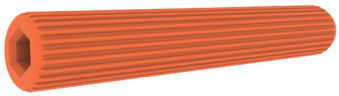

Hex handle

Pliers

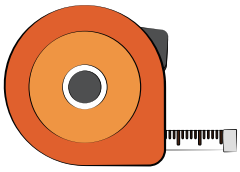

Tape measure

GK-14

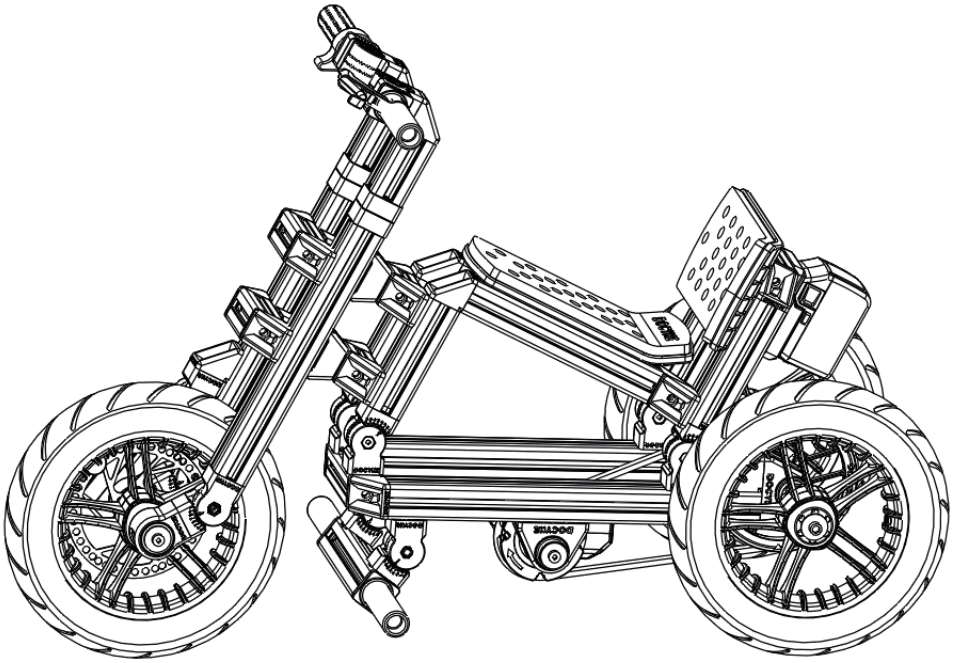

1 PART

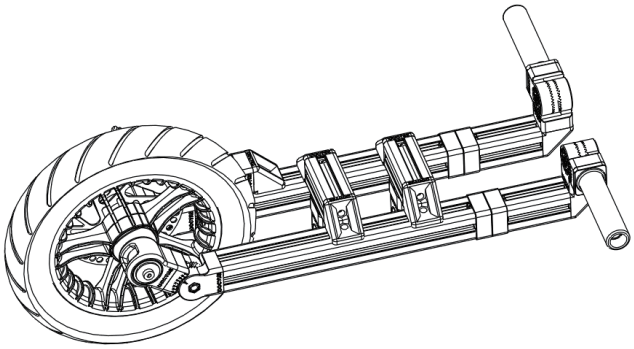

2 PART

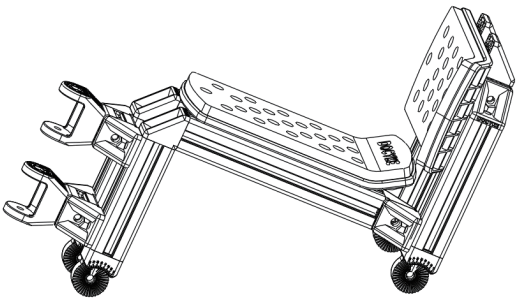

3 PART

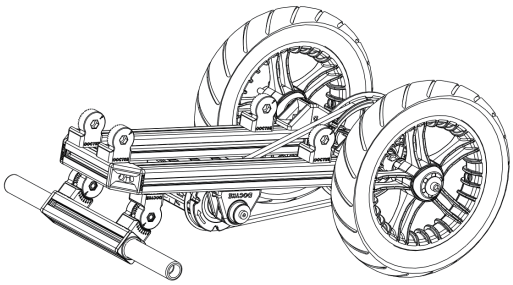

1 PART

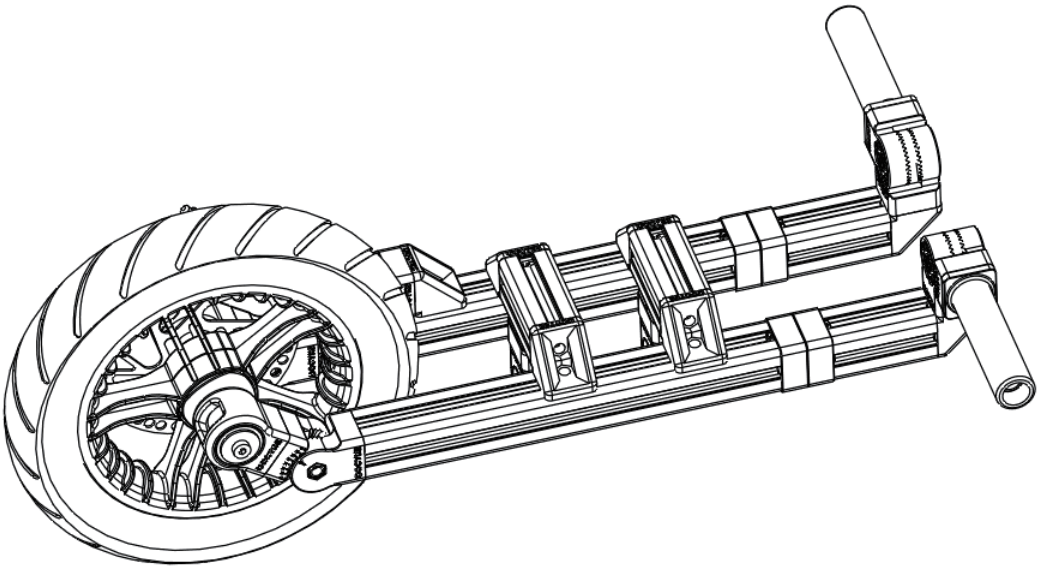

PART 1-1

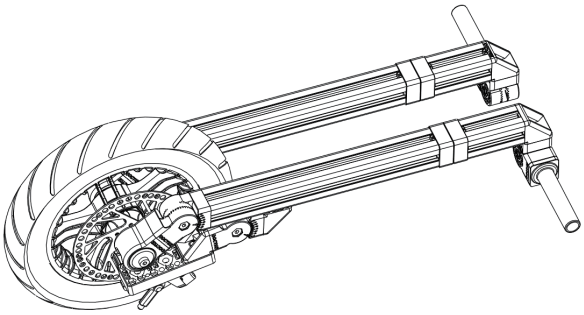

PART 1-2

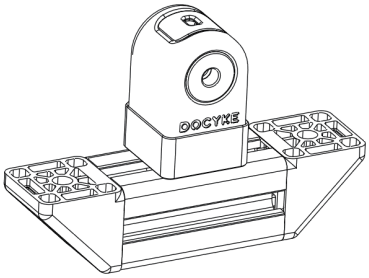

PART 1-1

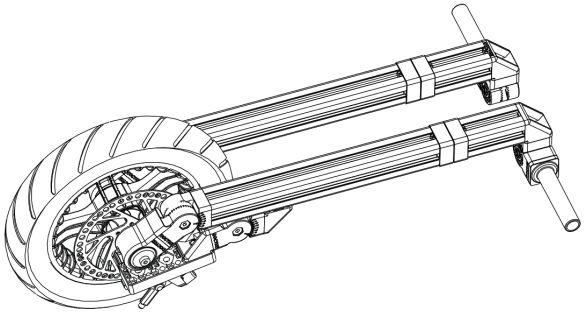

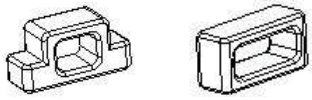

The positioning blocks are some of the smallest parts, but they are also some of the most important. Putting them in the right place is key to the product.

A-1

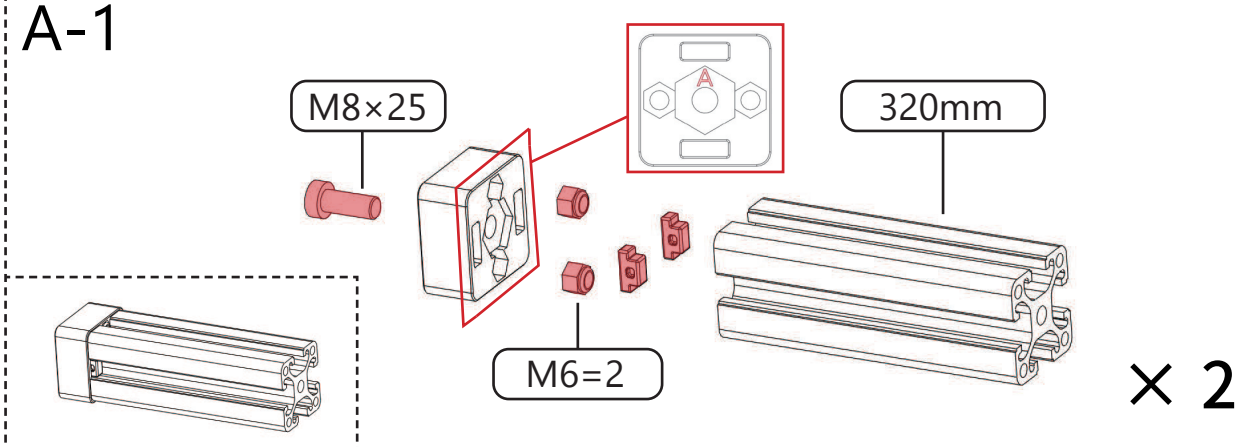

A-2

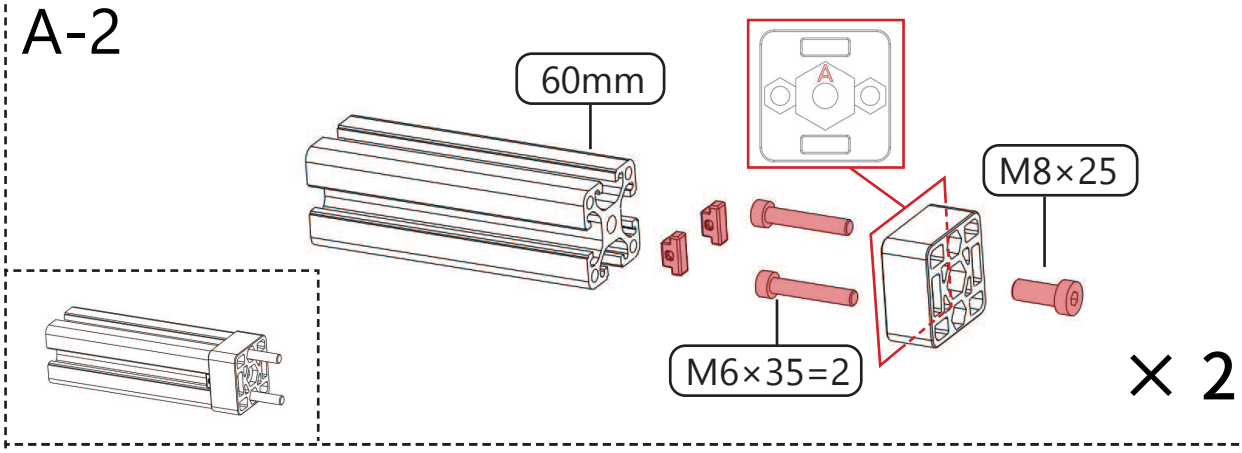

A-3

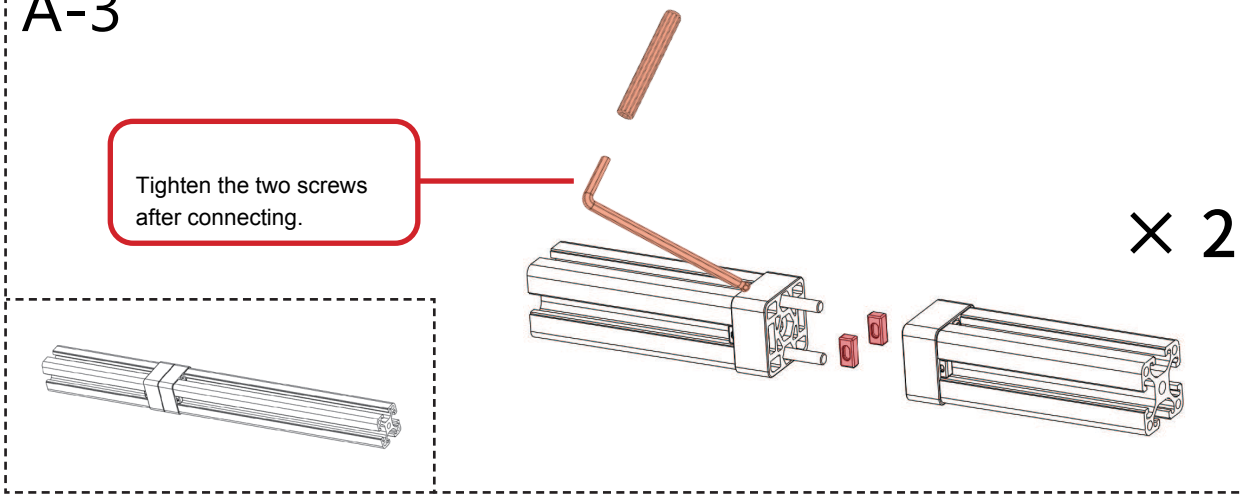

B-1

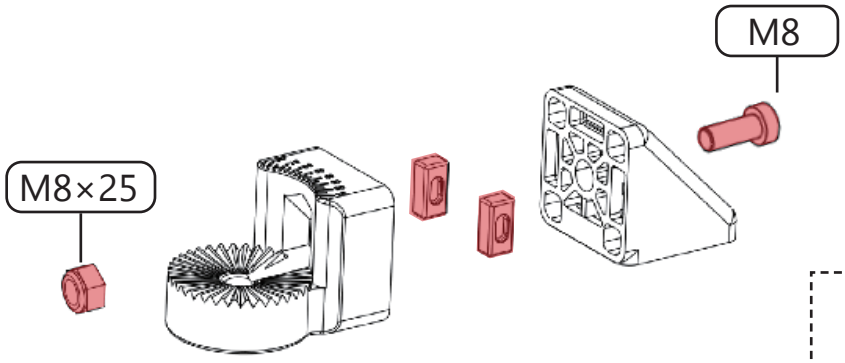

× 2

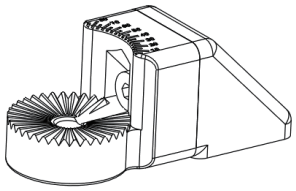

B-2

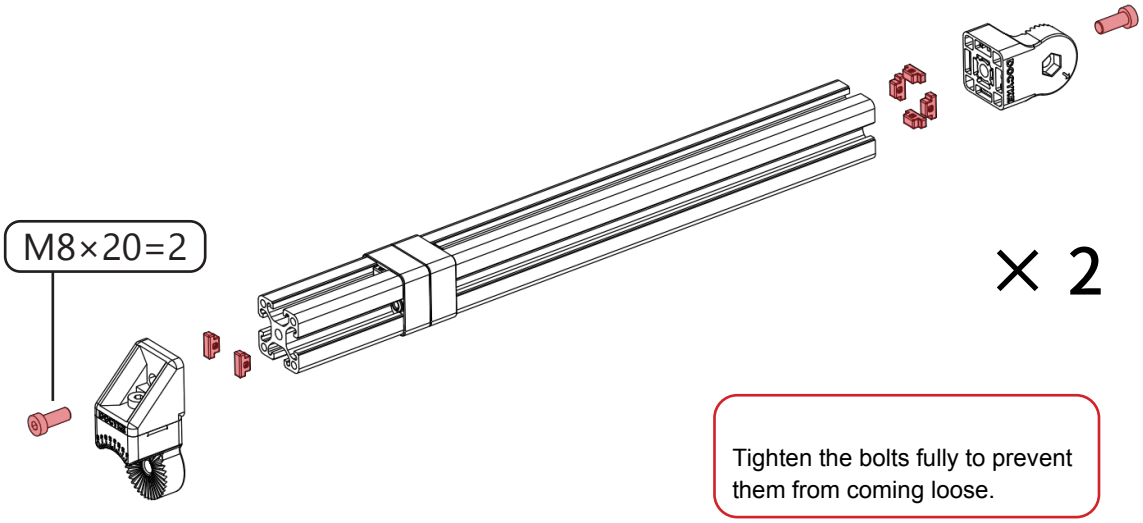

× 2

Tighten the bolts fully to prevent them from coming loose.

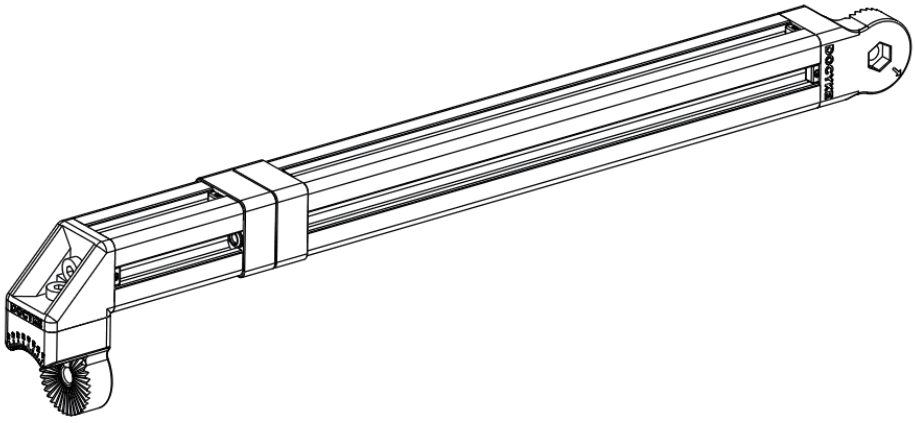

C

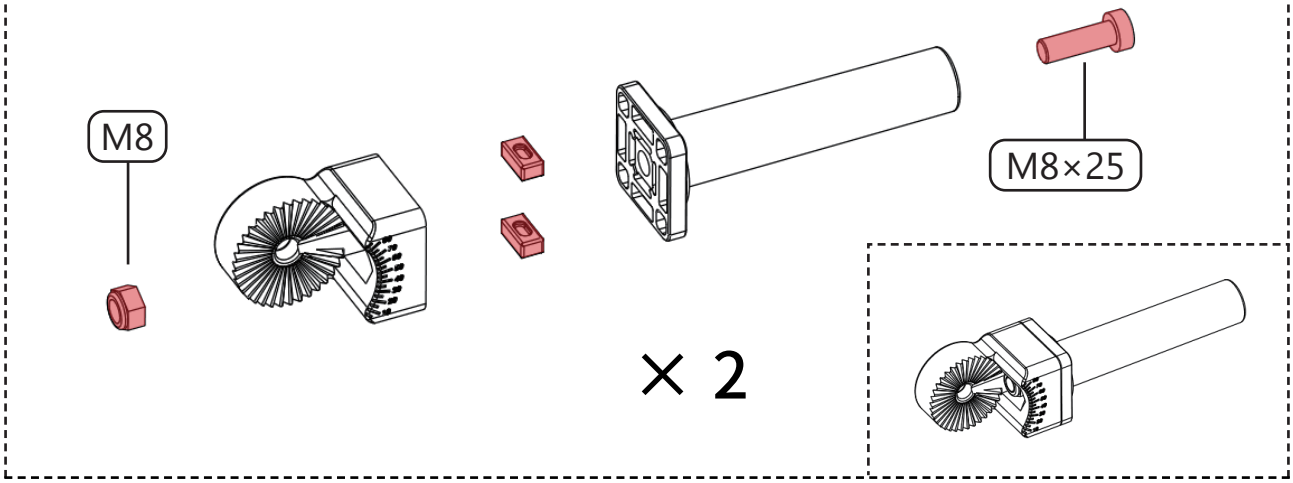

D

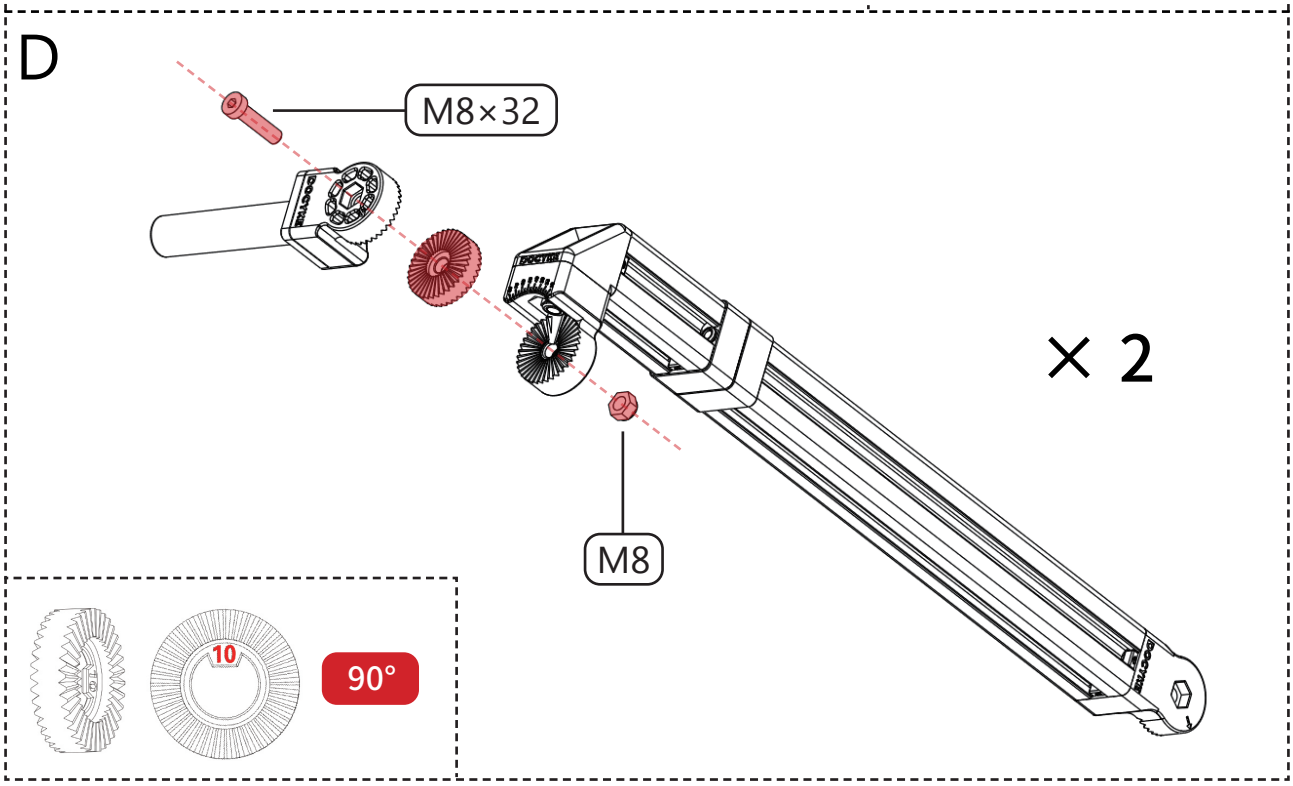

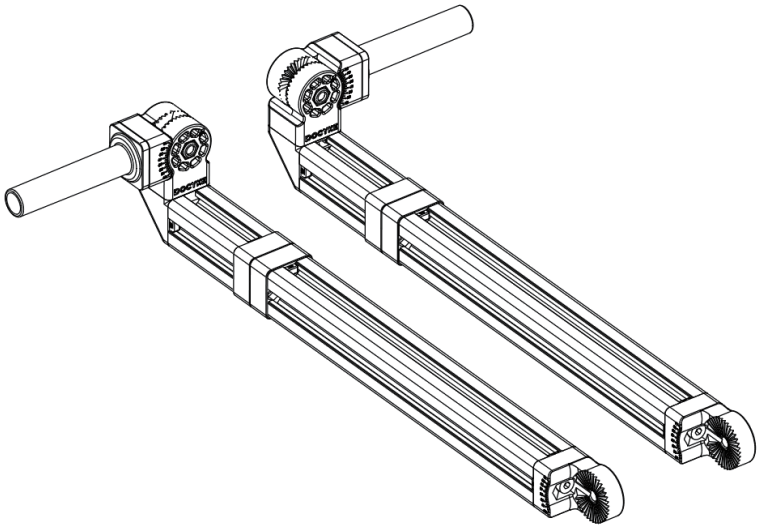

E

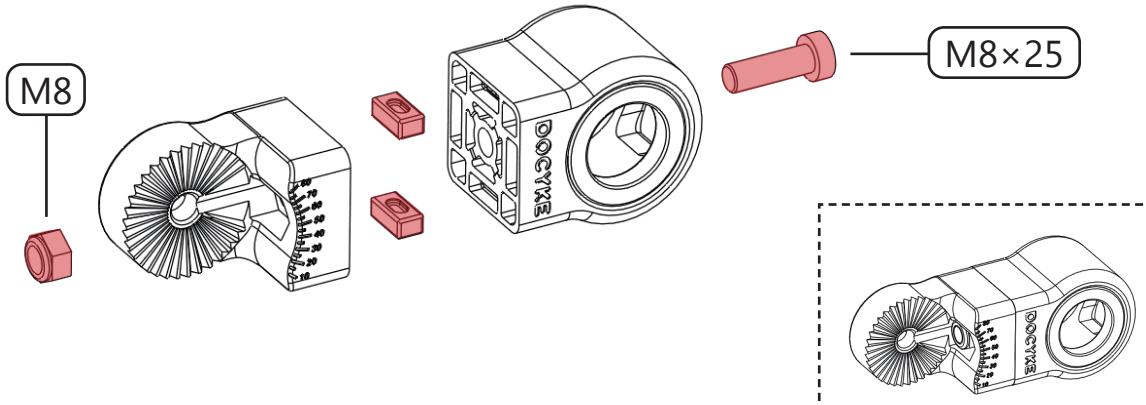

F

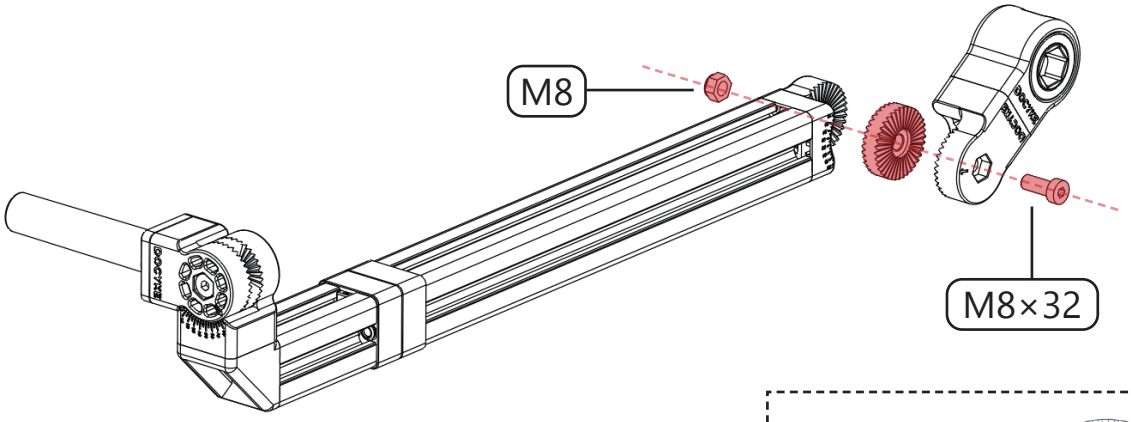

× 2

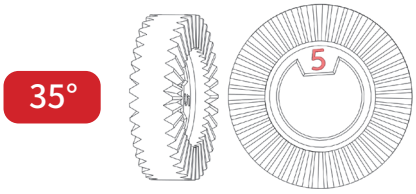

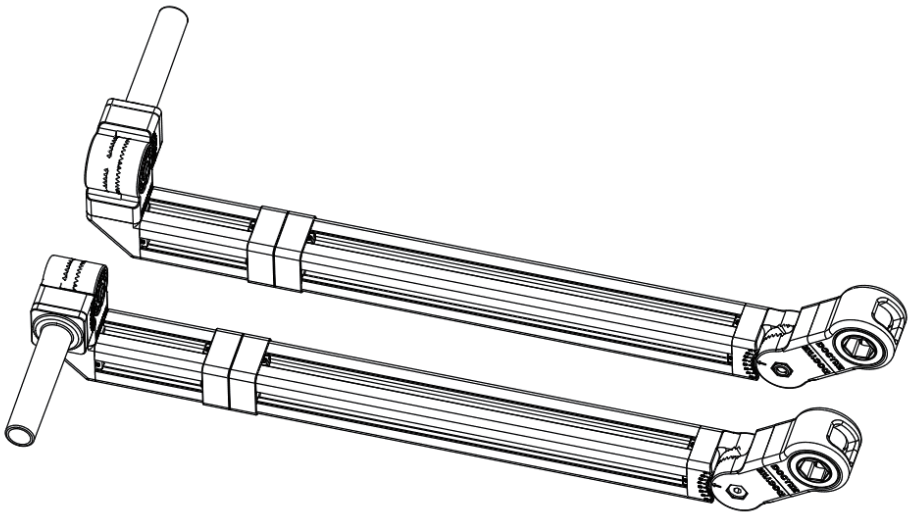

G

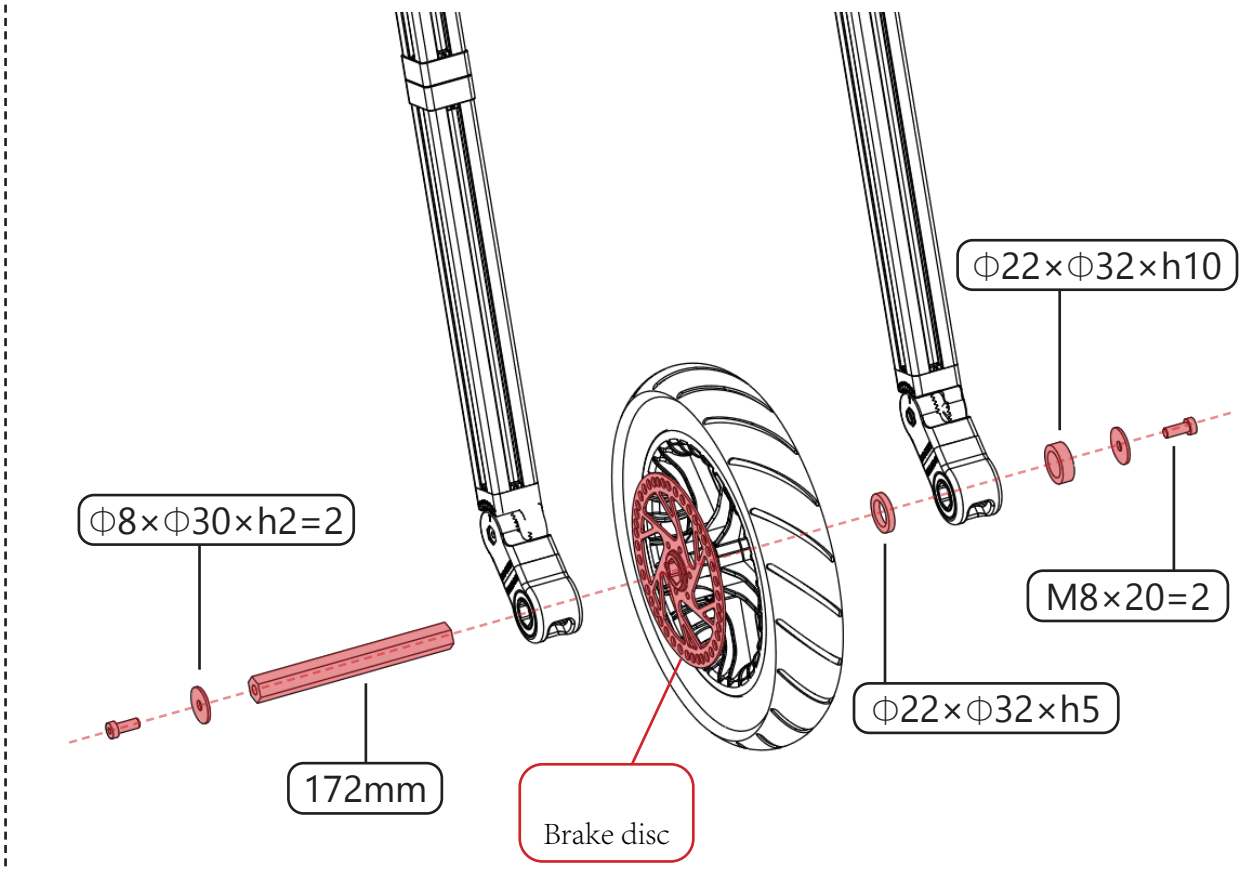

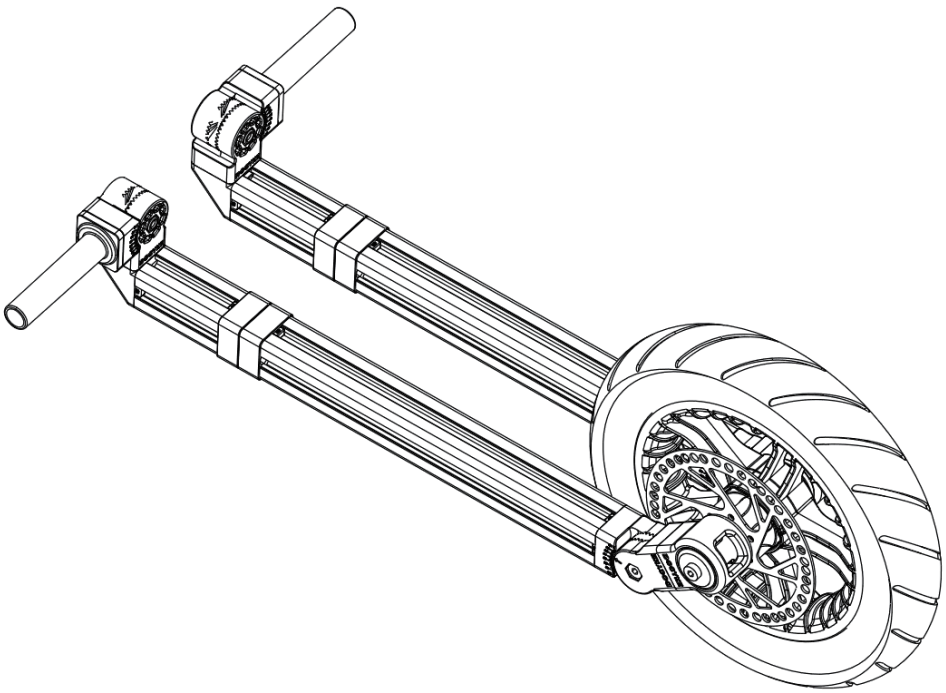

PART 1-2

A

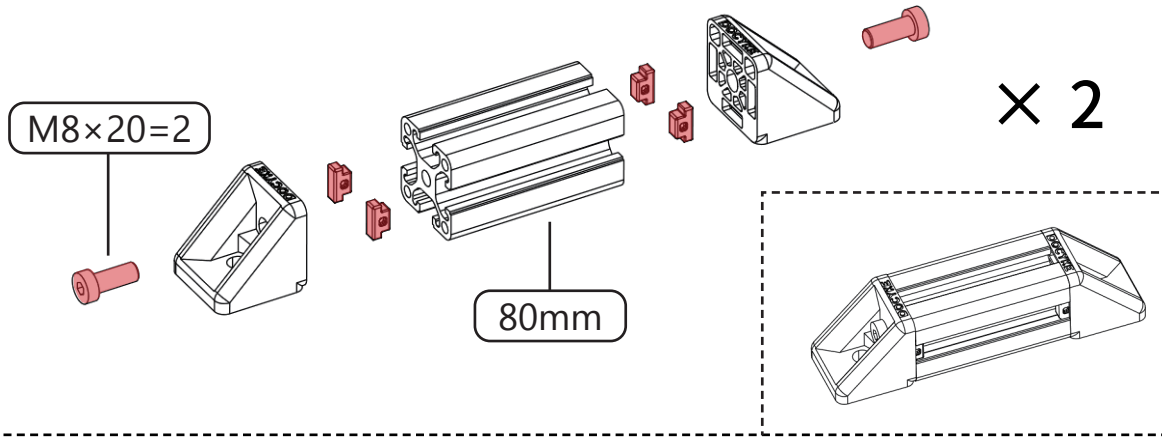

B

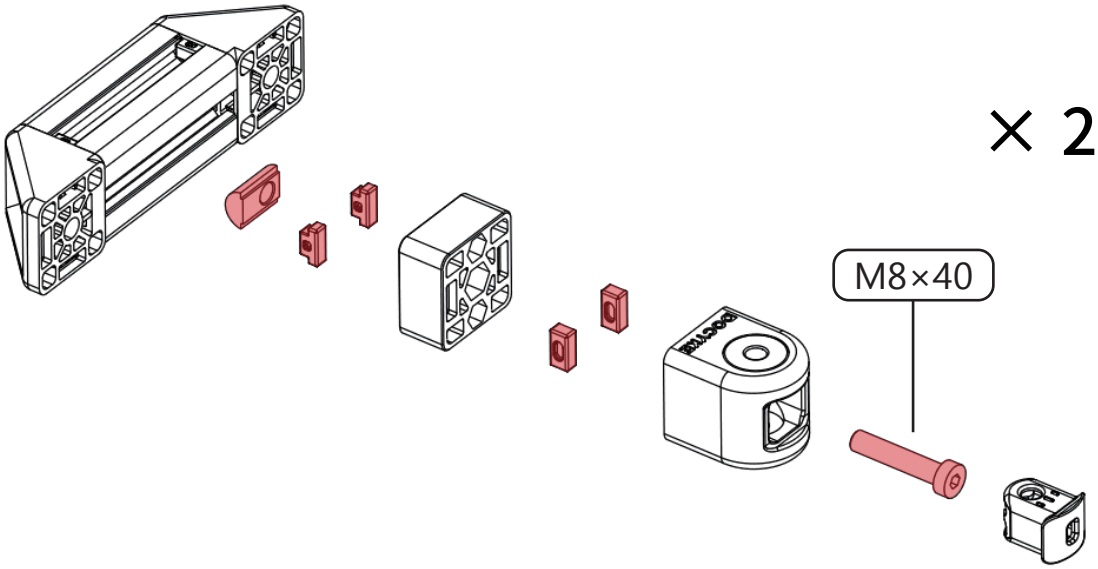

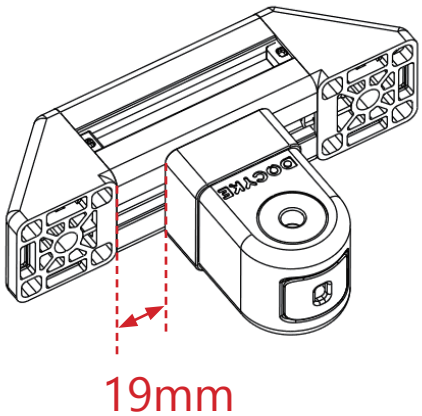

× 2

PART 1 ASM

A

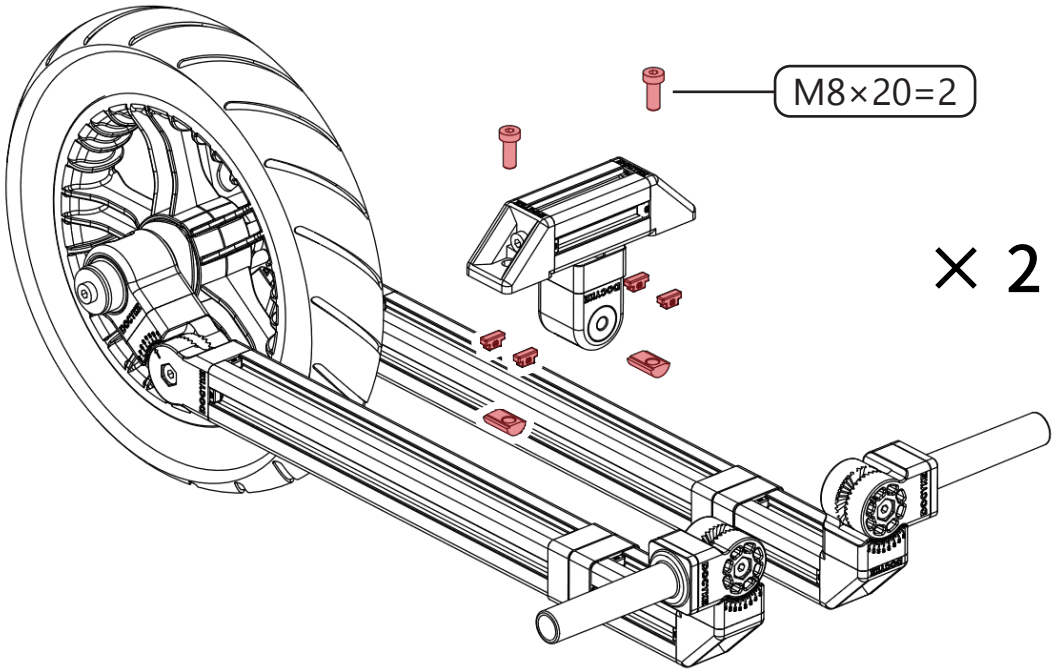

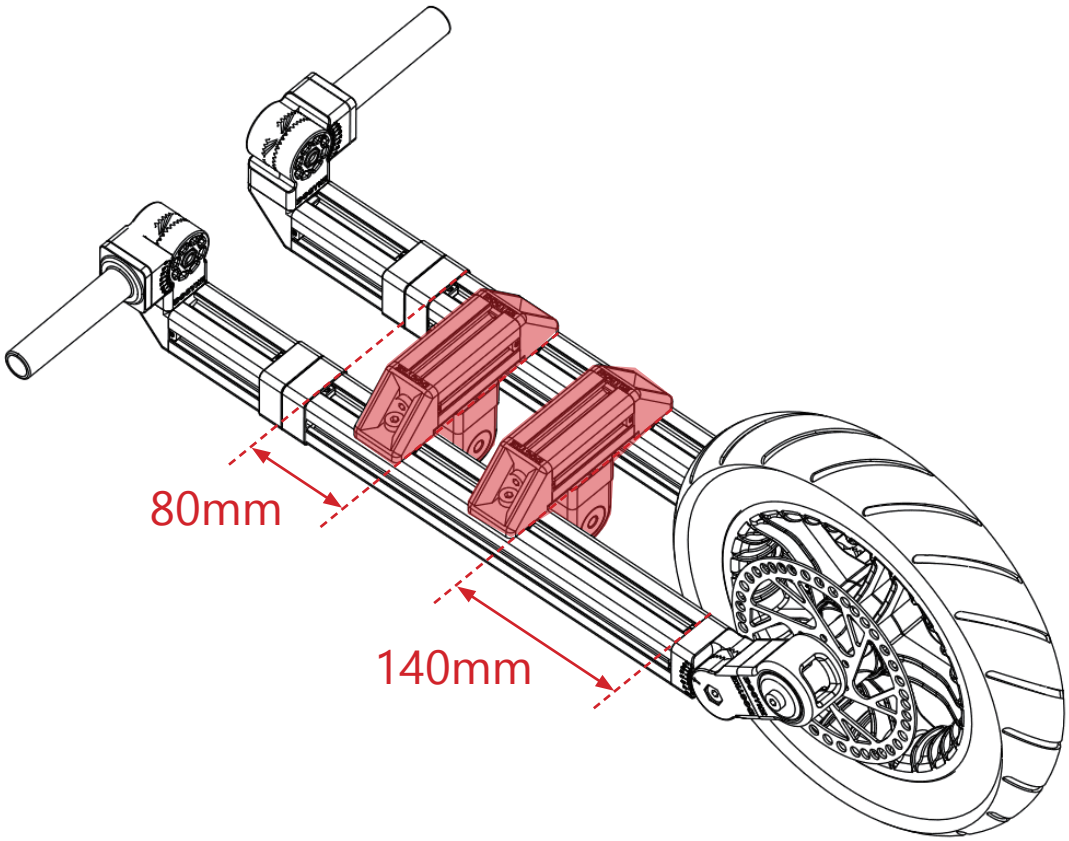

B

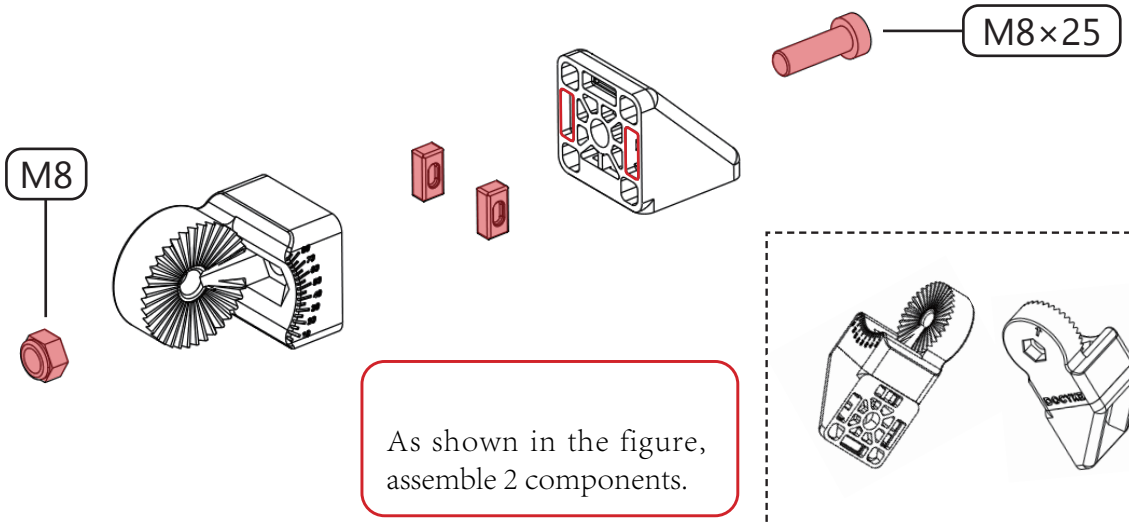
M8×25
M8
As shown in the figure, assemble 2 components.

C

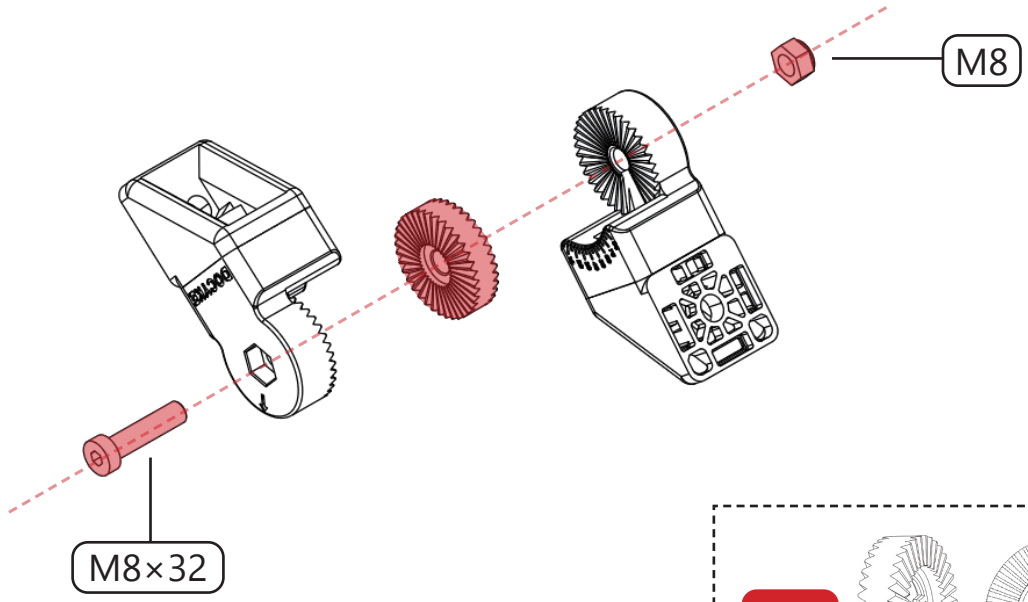
M8
M8×32

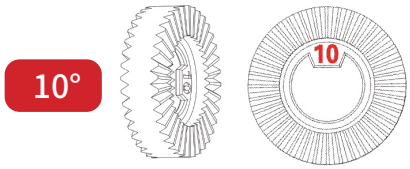
10°
10

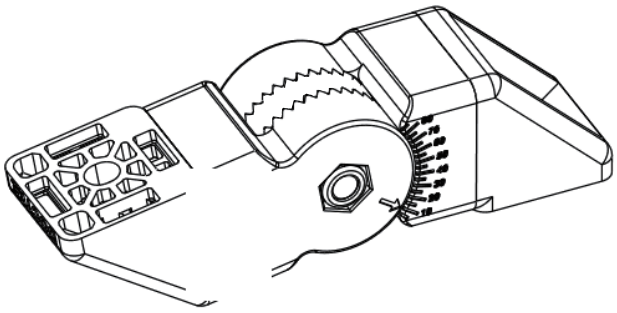

D

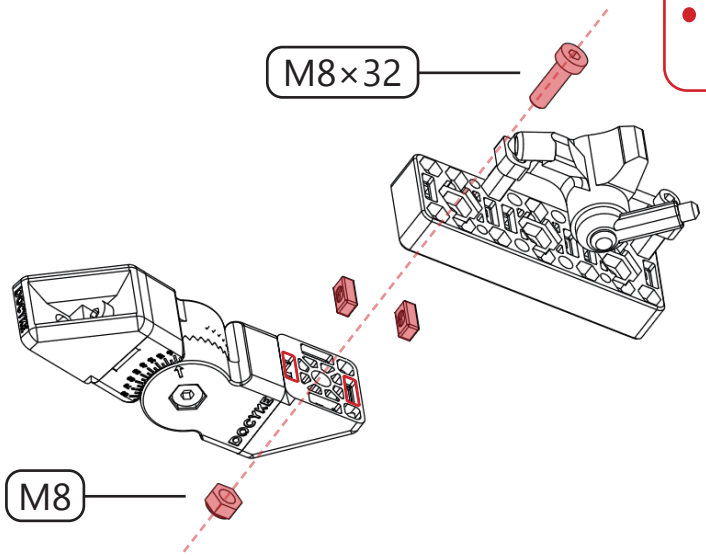

See page 34 for details.

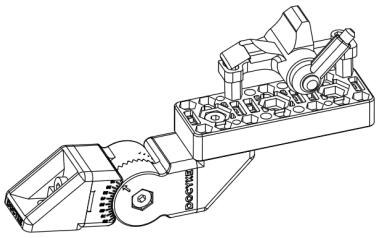

E

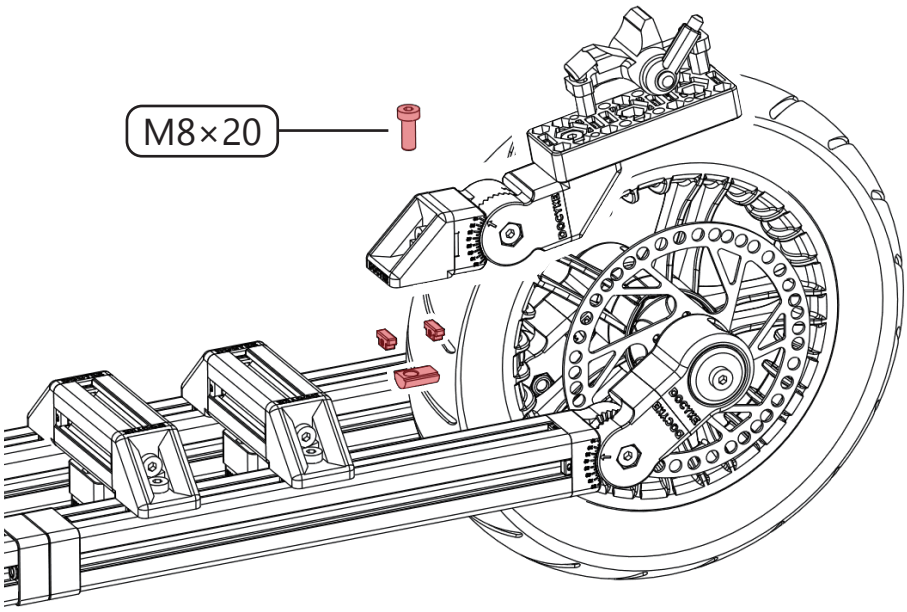

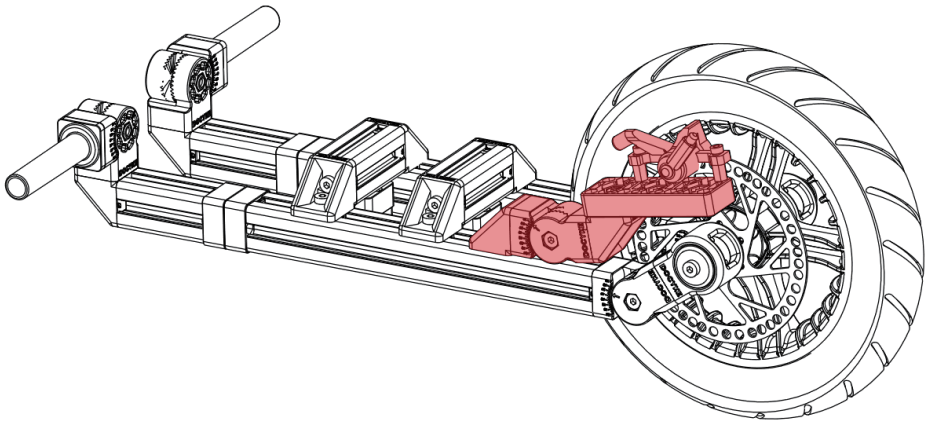

F

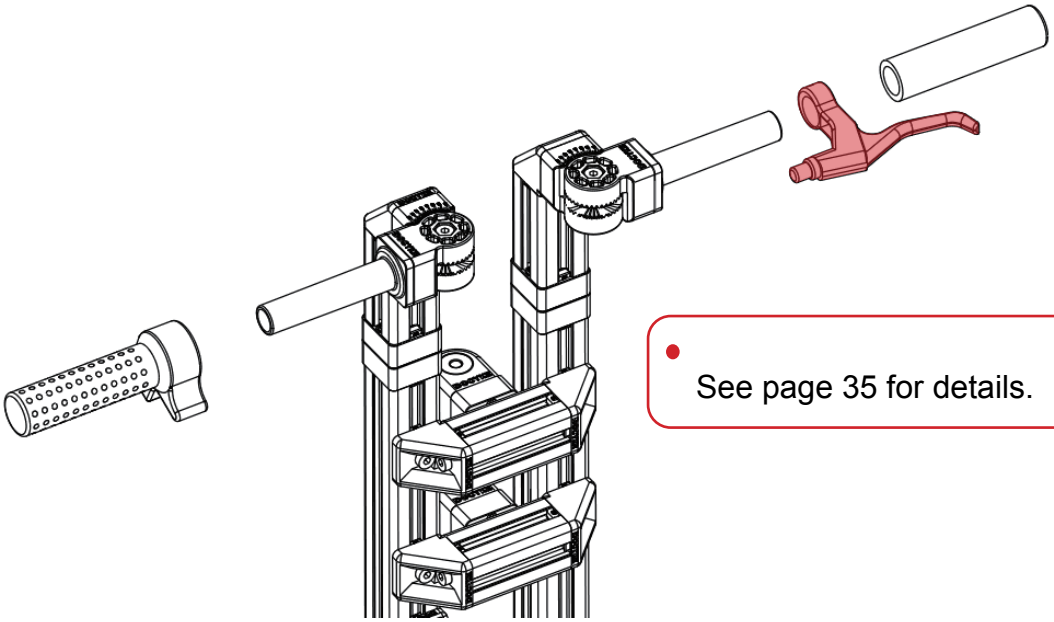

See page 35 for details.

Tighten the screws to secure the speed handle.

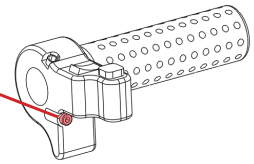

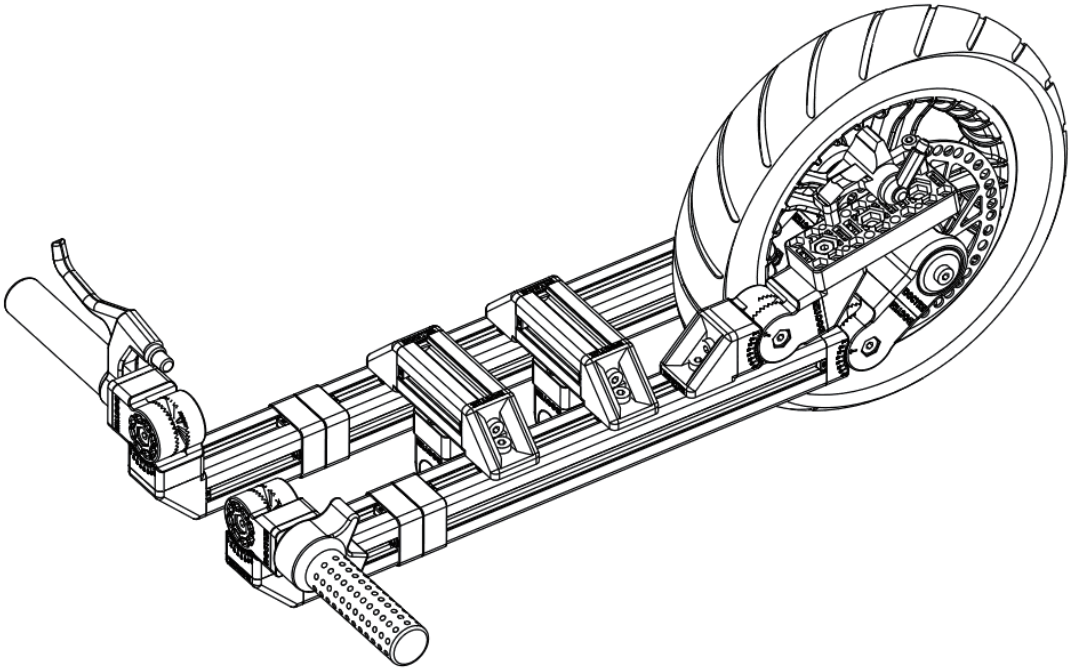

2 PART

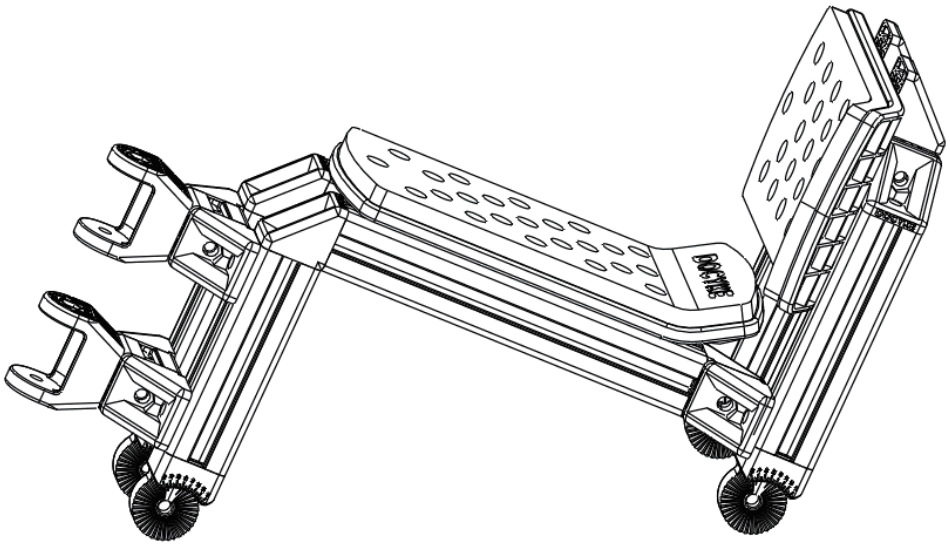

PART 2-1

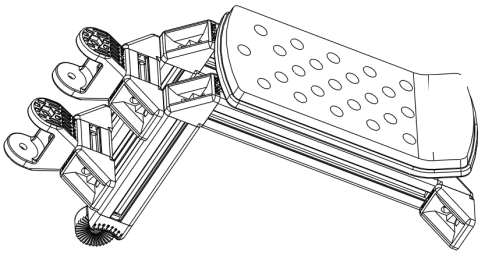

PART 2-2

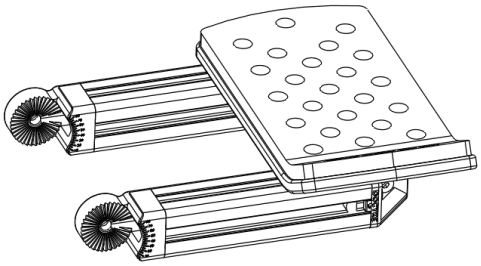

PART 2-1

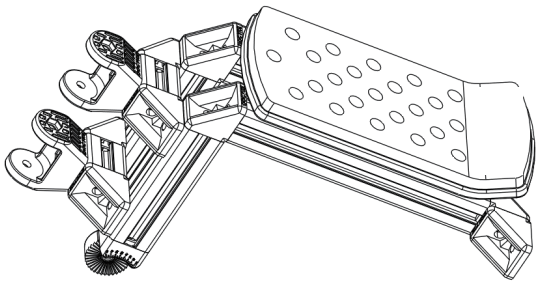

A

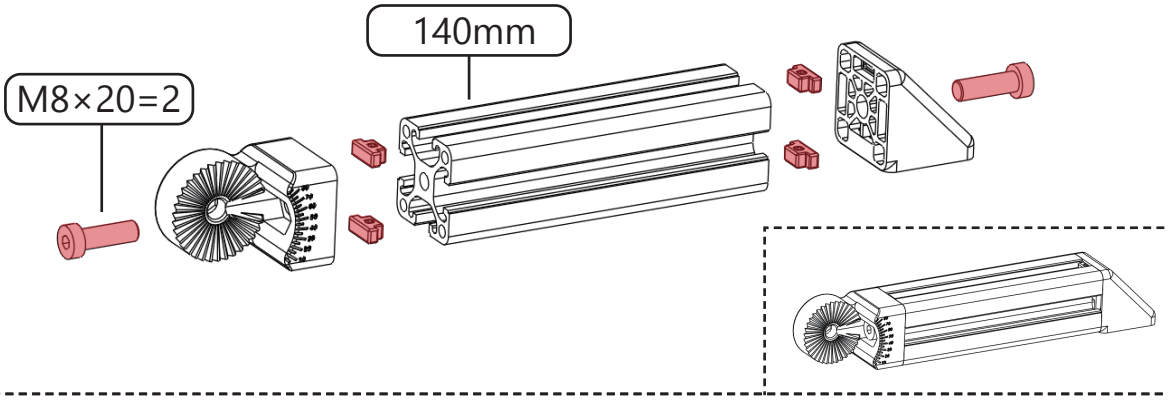

B

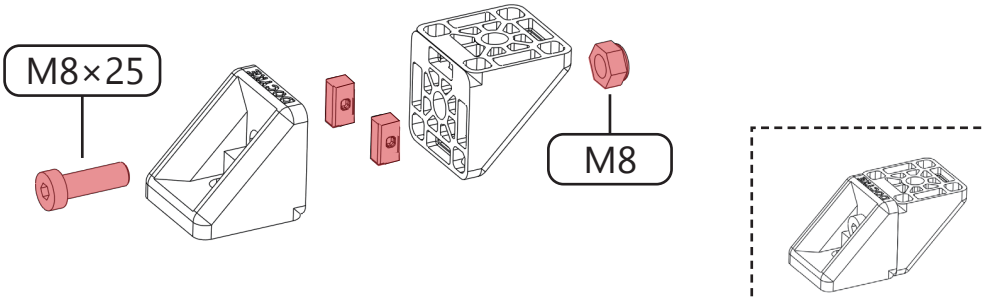

C

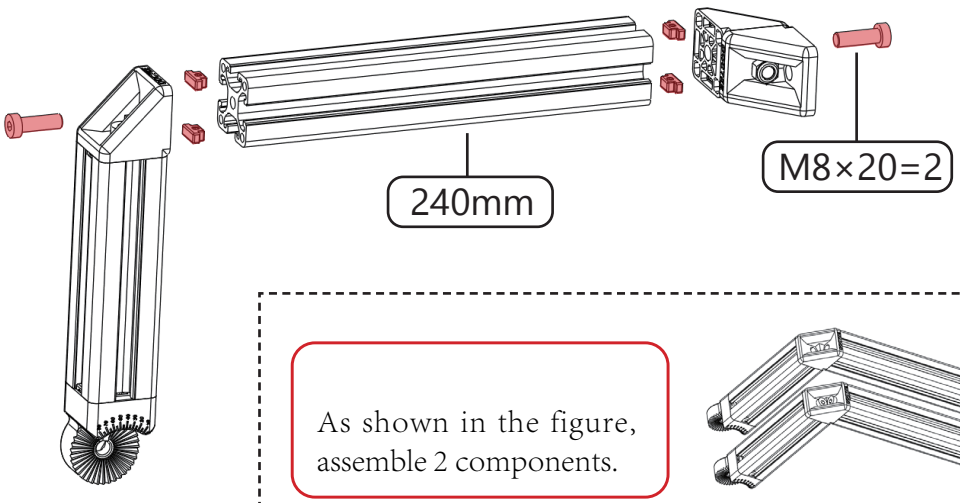

As shown in the figure, assemble 2 components.

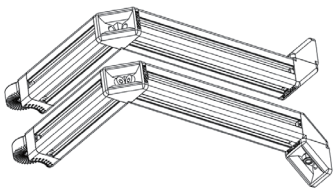

D

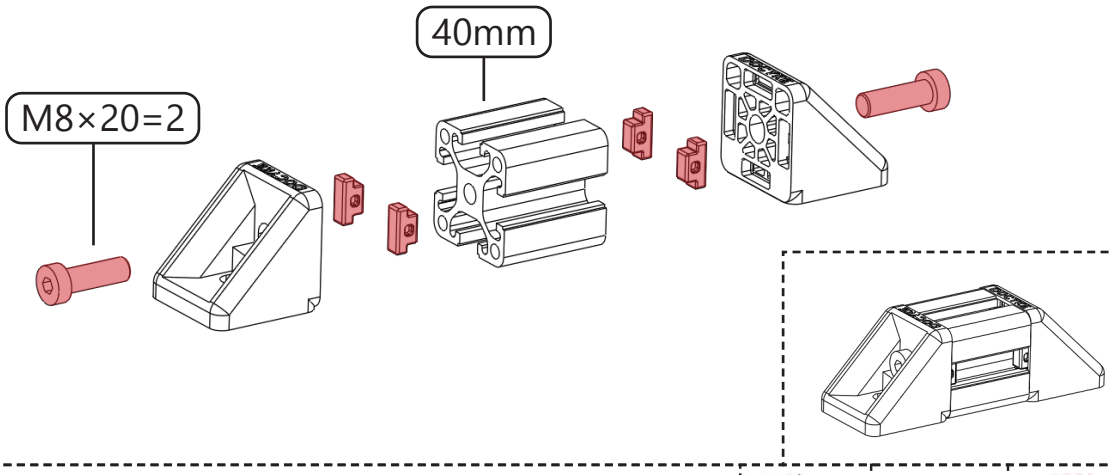

E

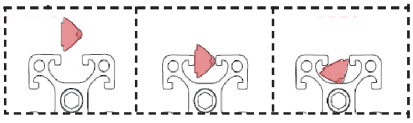

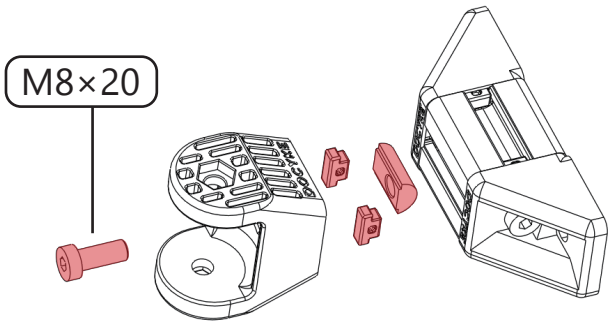

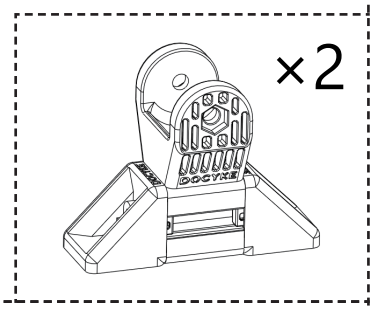

F

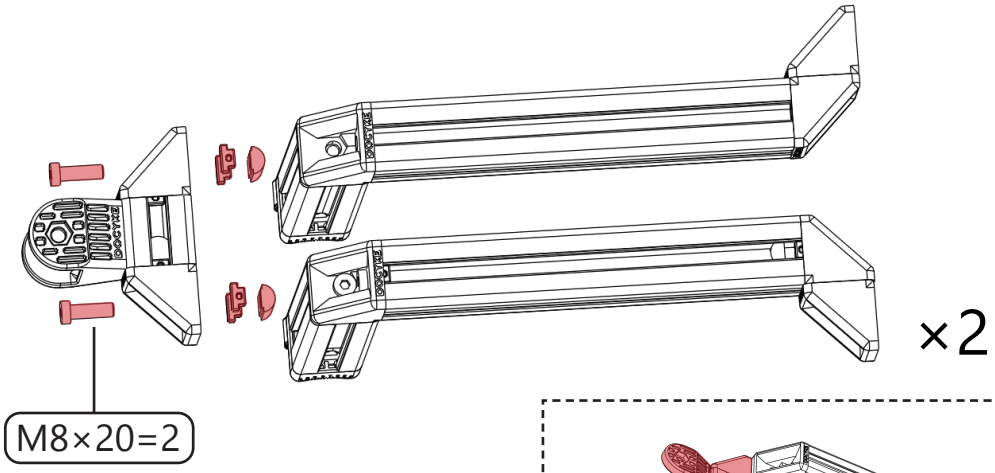

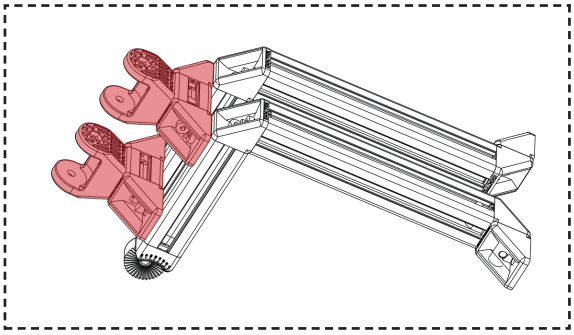

G

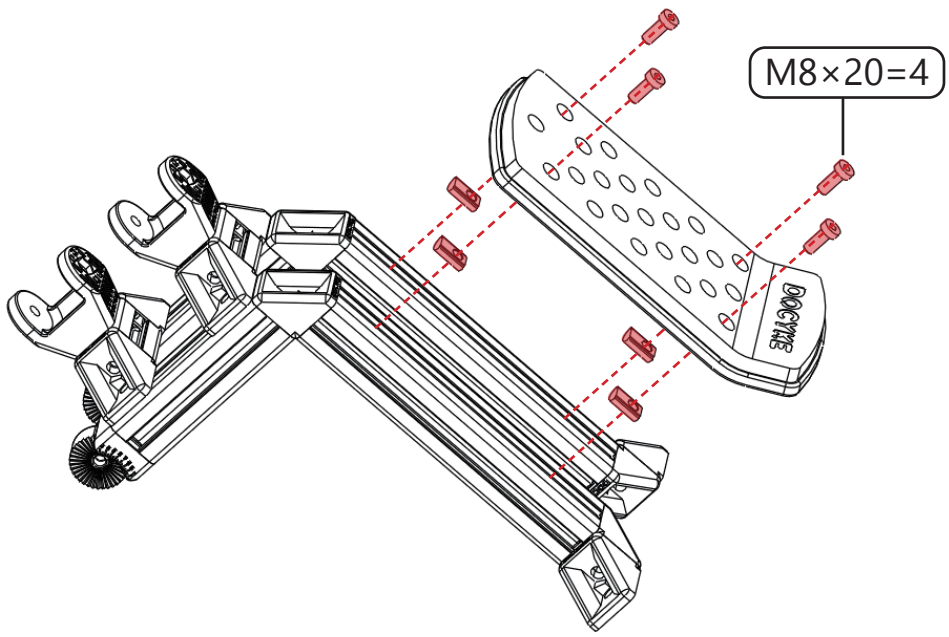

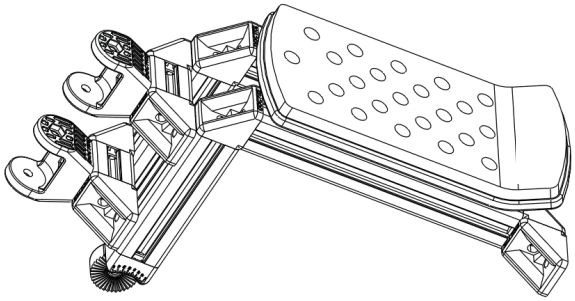

PART 2-2

A

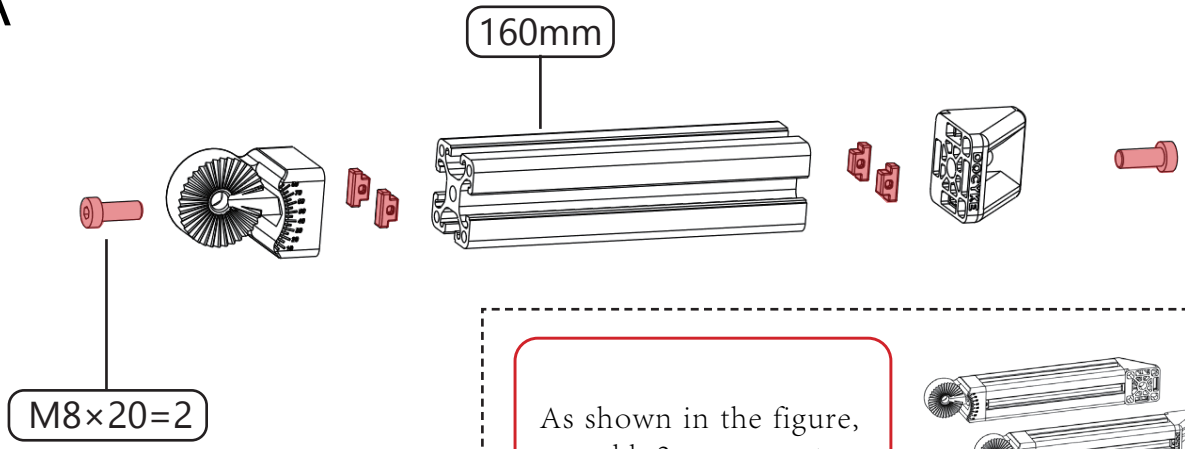

As shown in the figure, assemble 2 components.

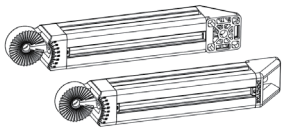

B

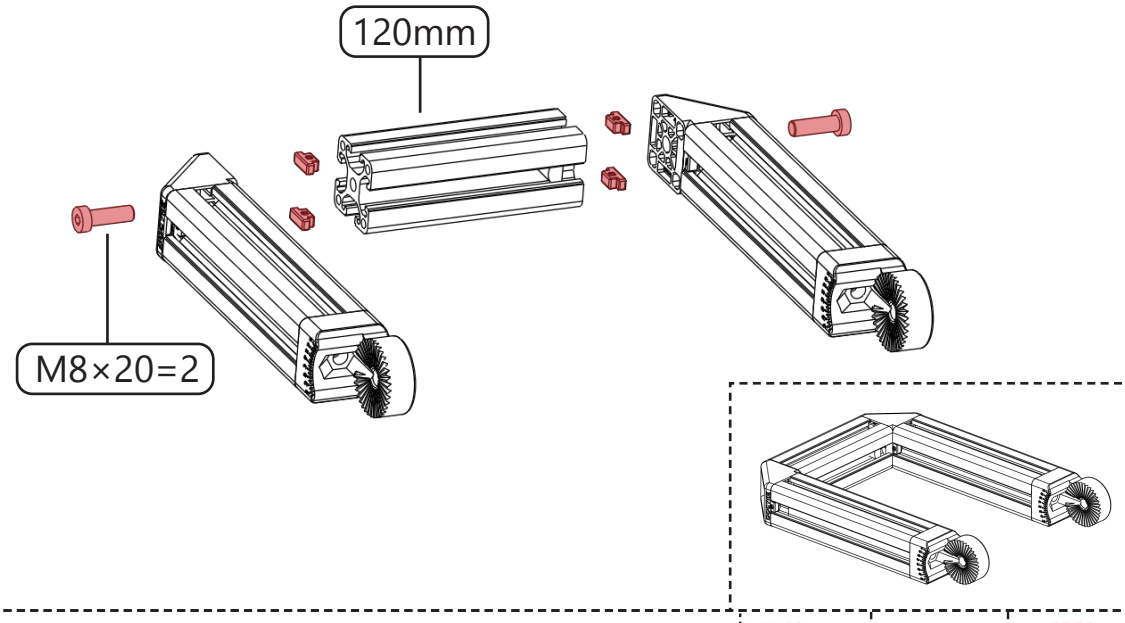

C

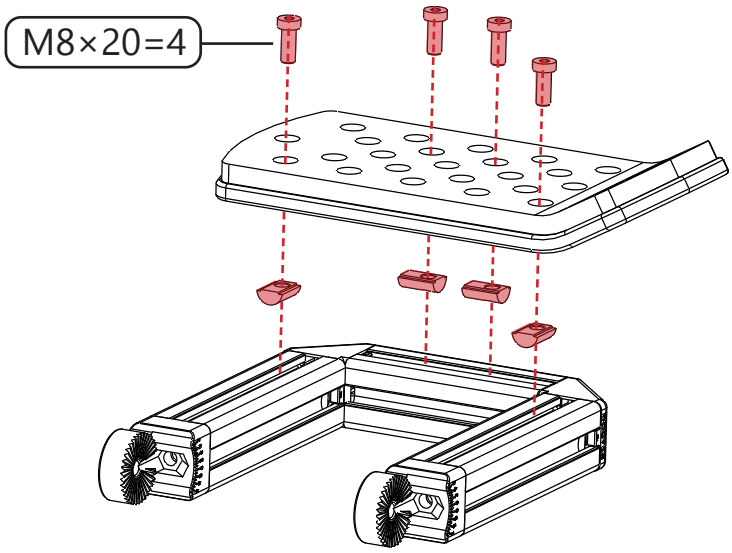

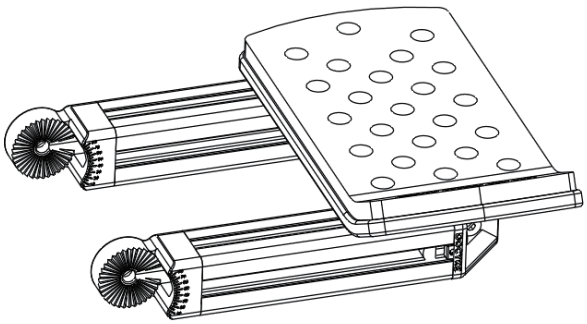

ASM.
A

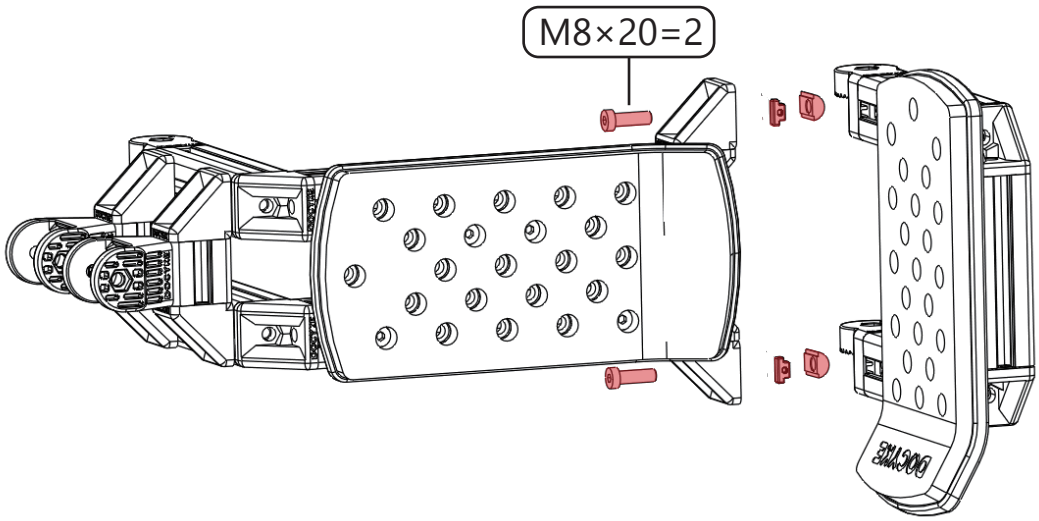

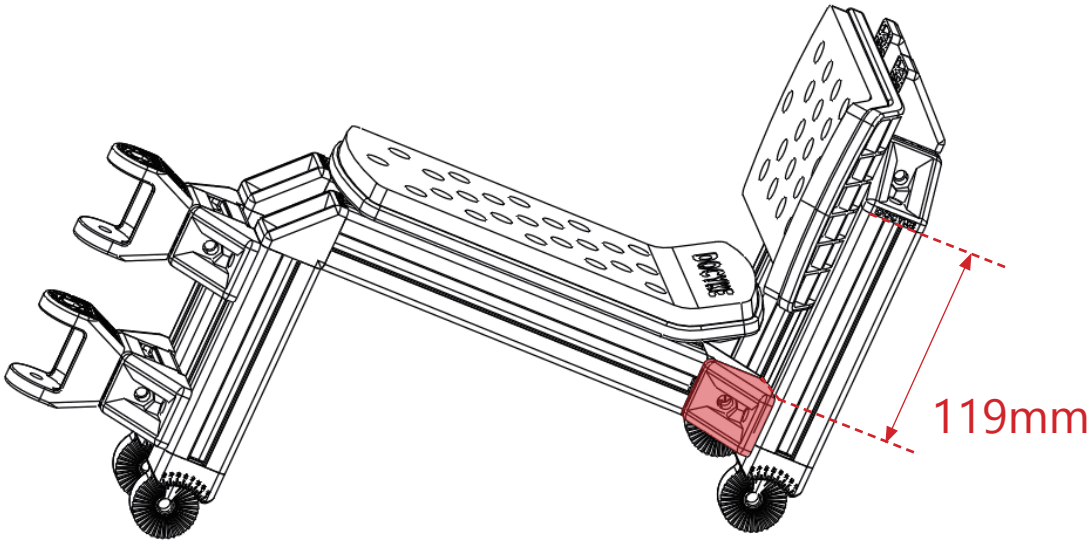

3 PART

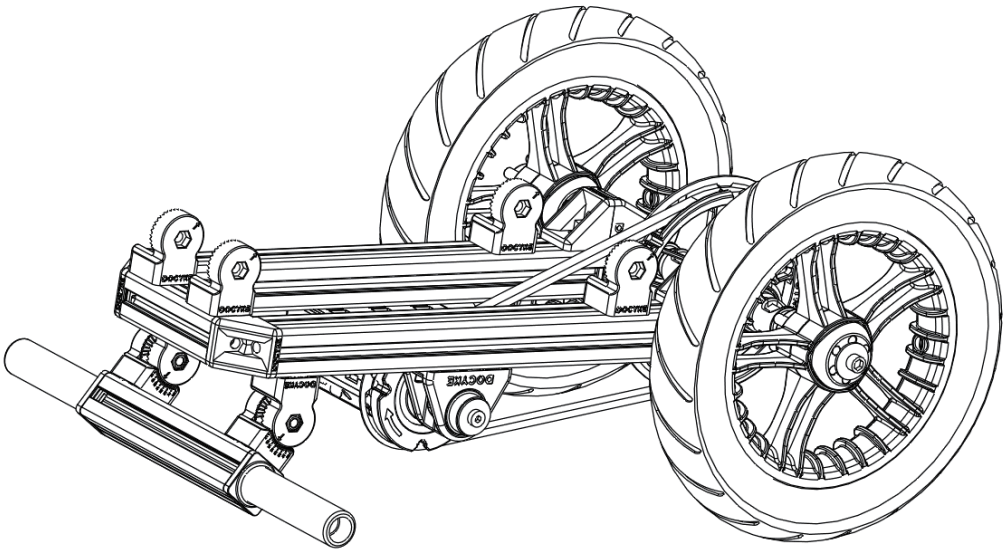

PART 3-1

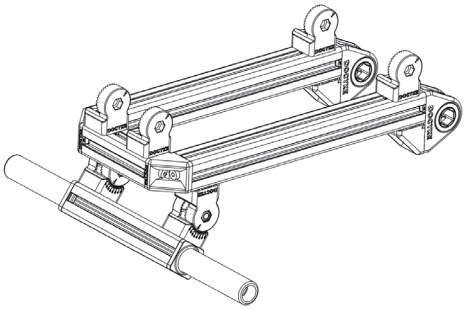

PART 3-2

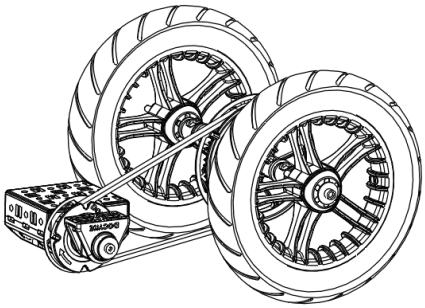

PART 3-1

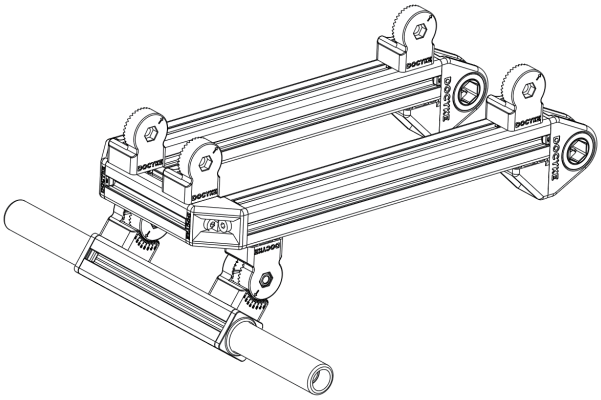

A

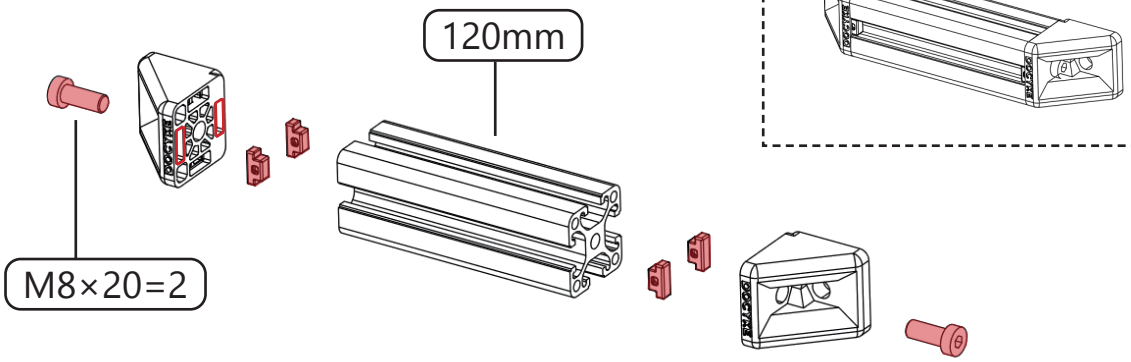

B

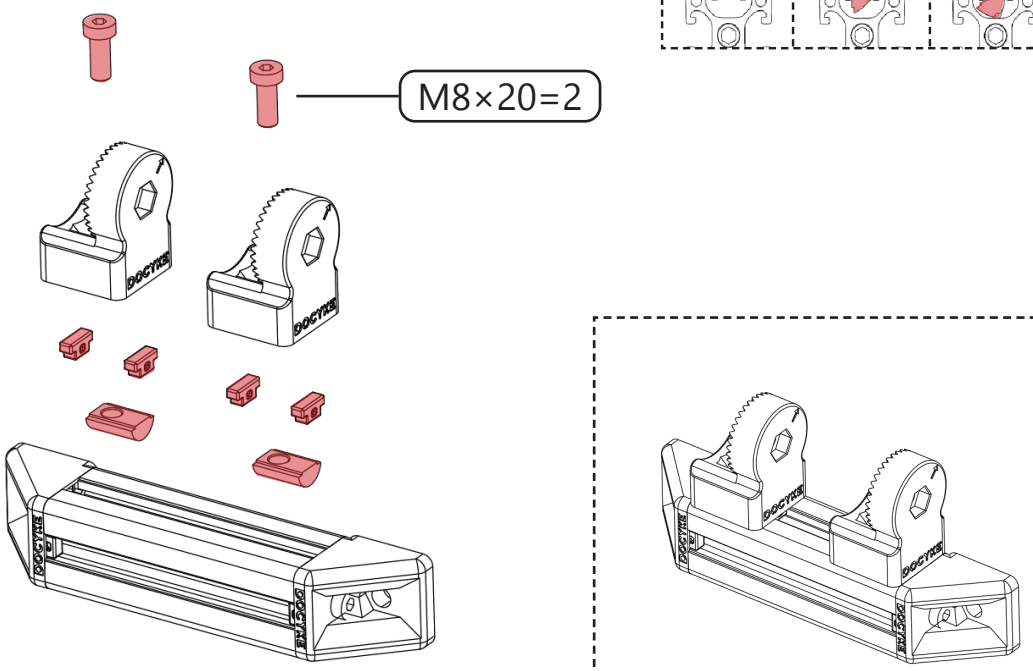

C

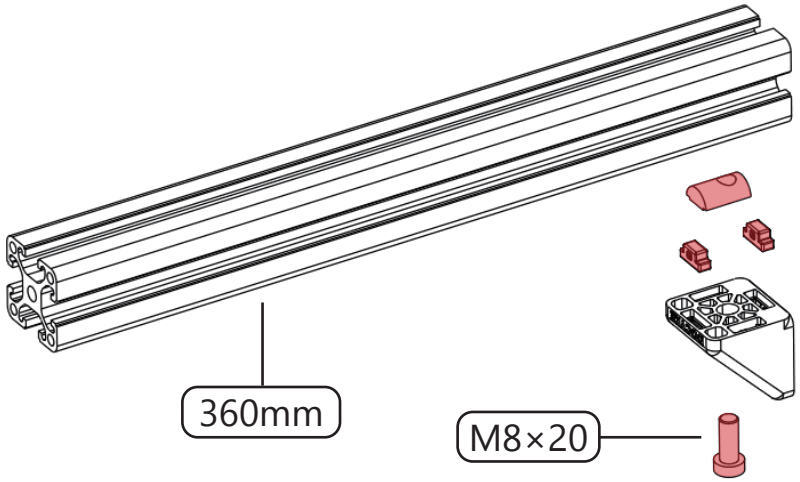

D

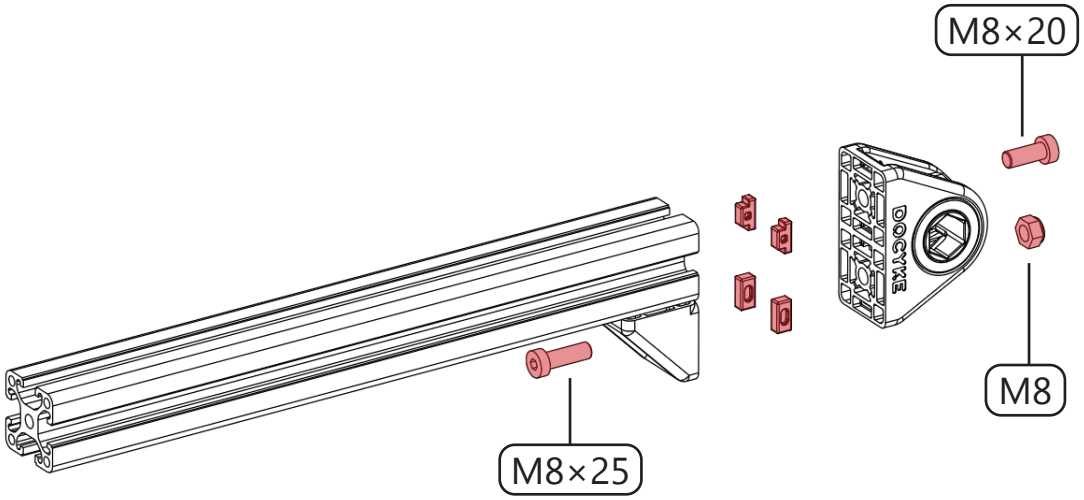

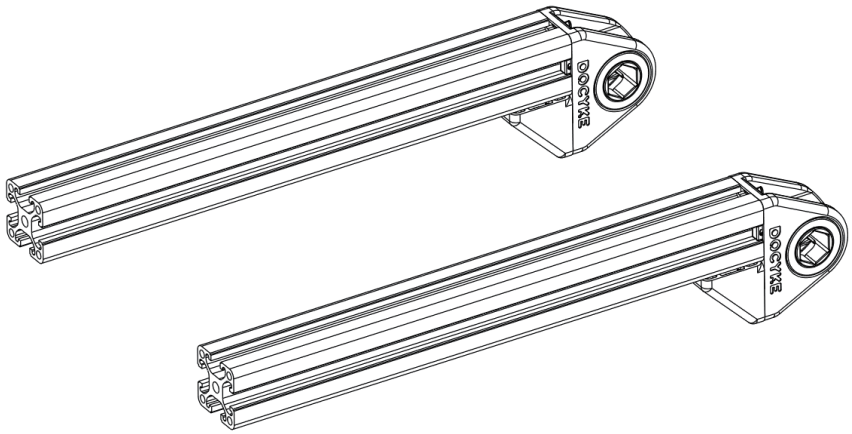

E

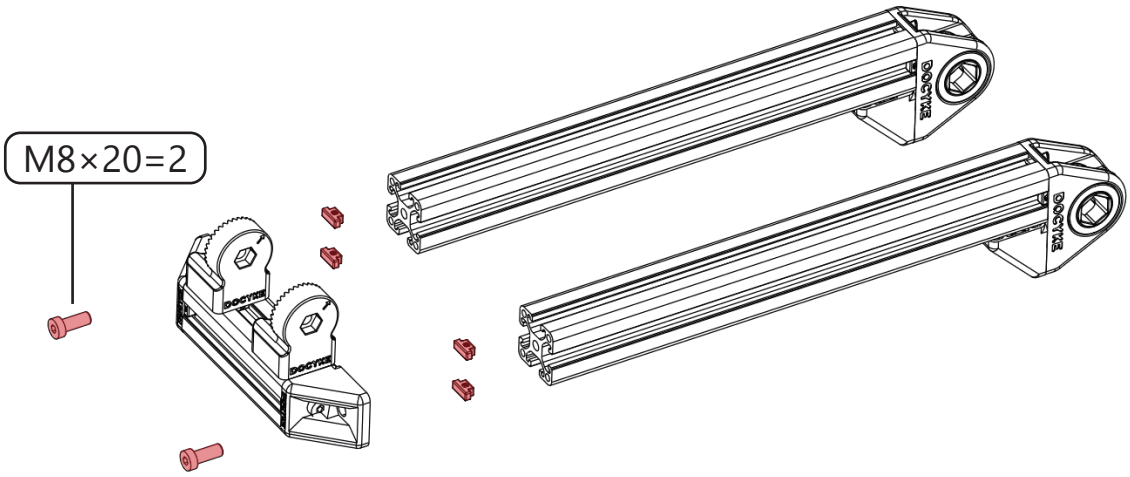

F

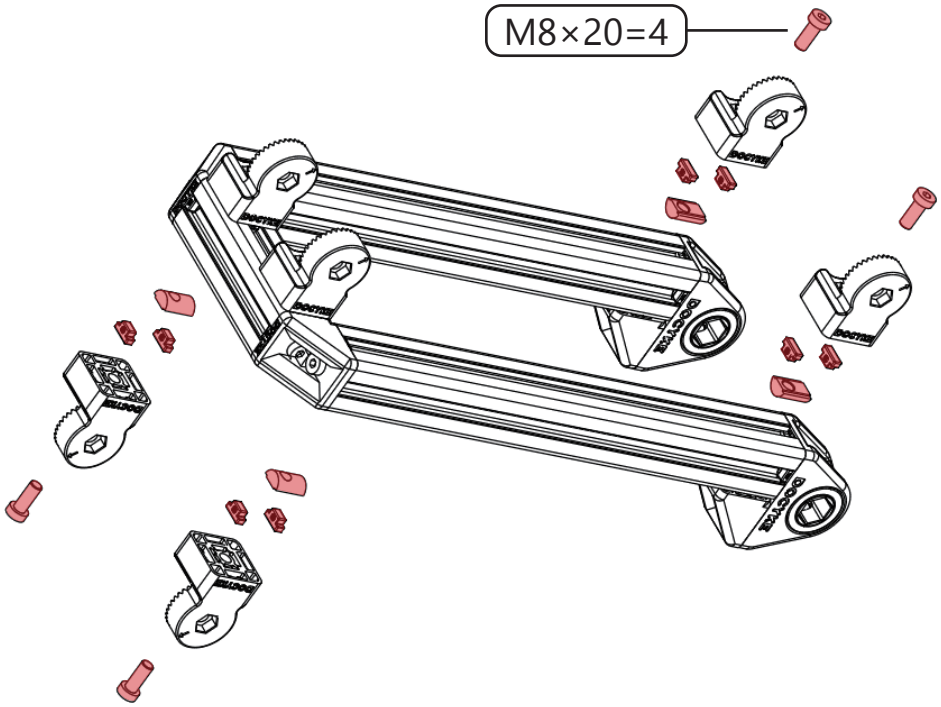

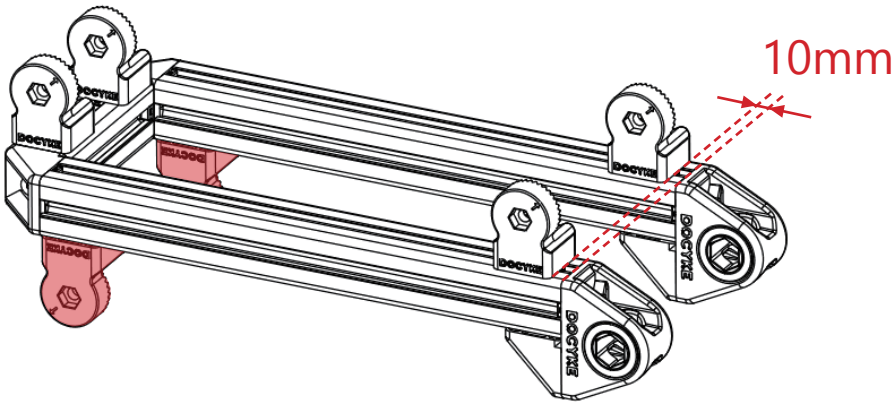

G

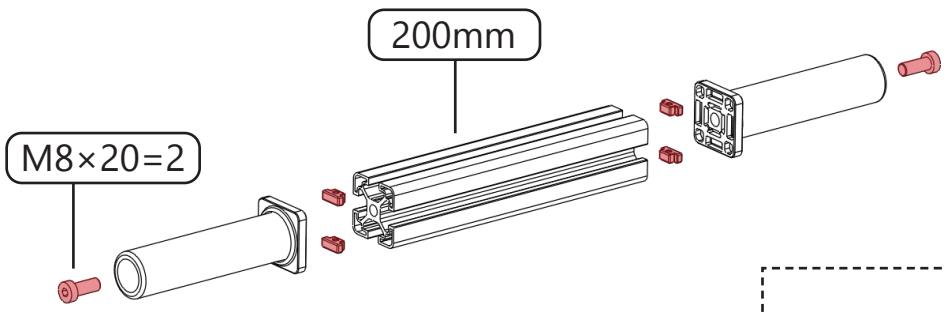

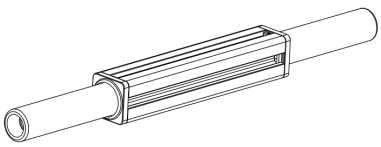

H

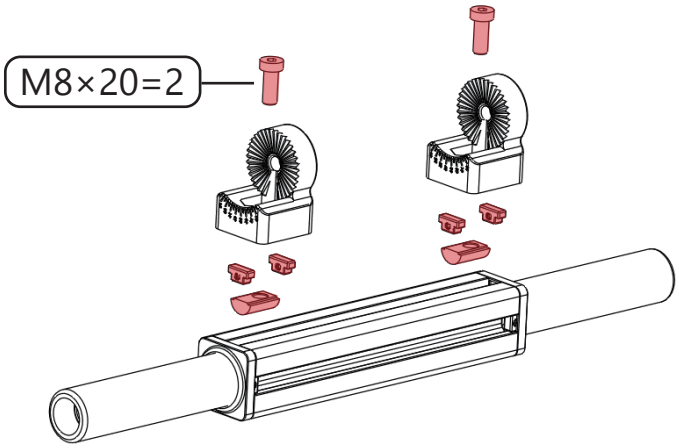

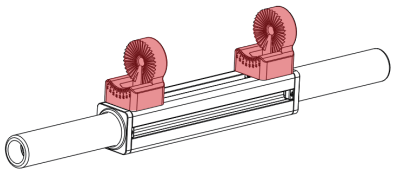

I

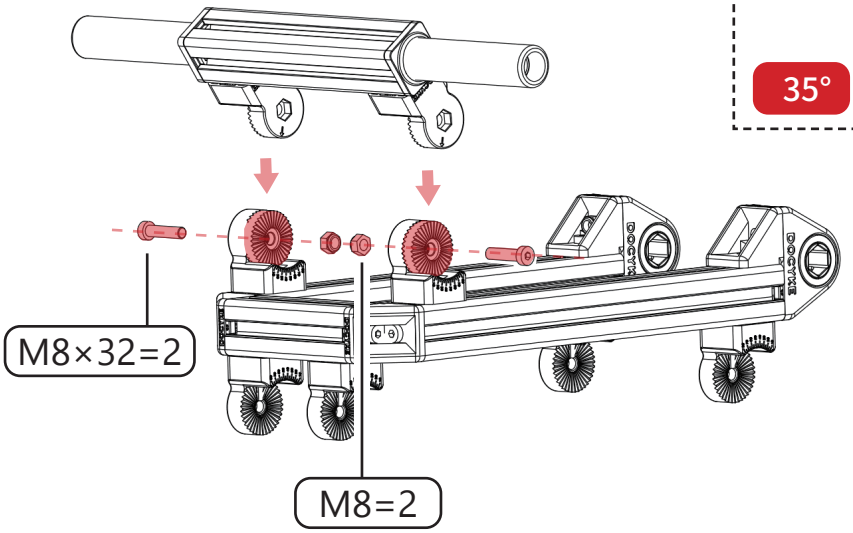

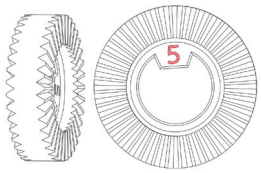

35°

PART 3-2

A

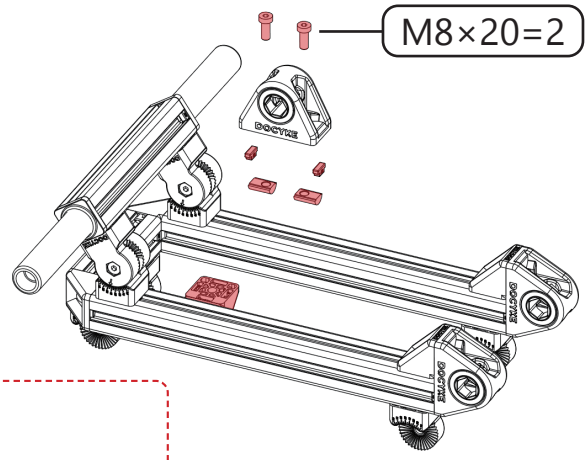

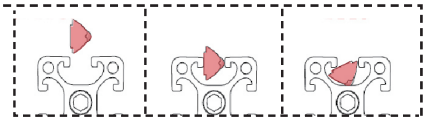

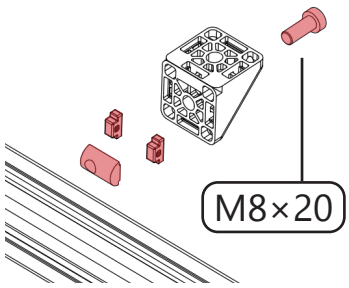

Do not tighten the screws until the toothed belt is firmly tensioned, then tighten the bolts well.

B

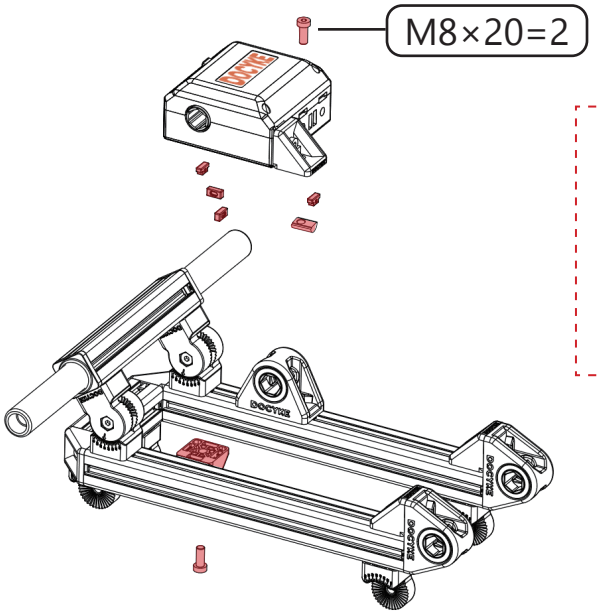

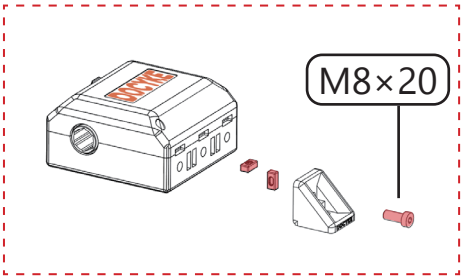

Do not tighten the screws until the toothed belt is firmly tensioned, then tighten the bolts well.

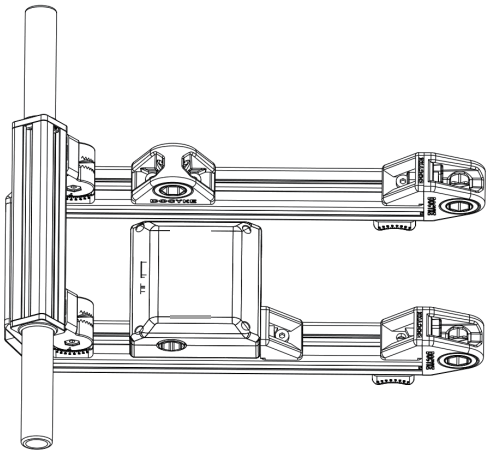

C

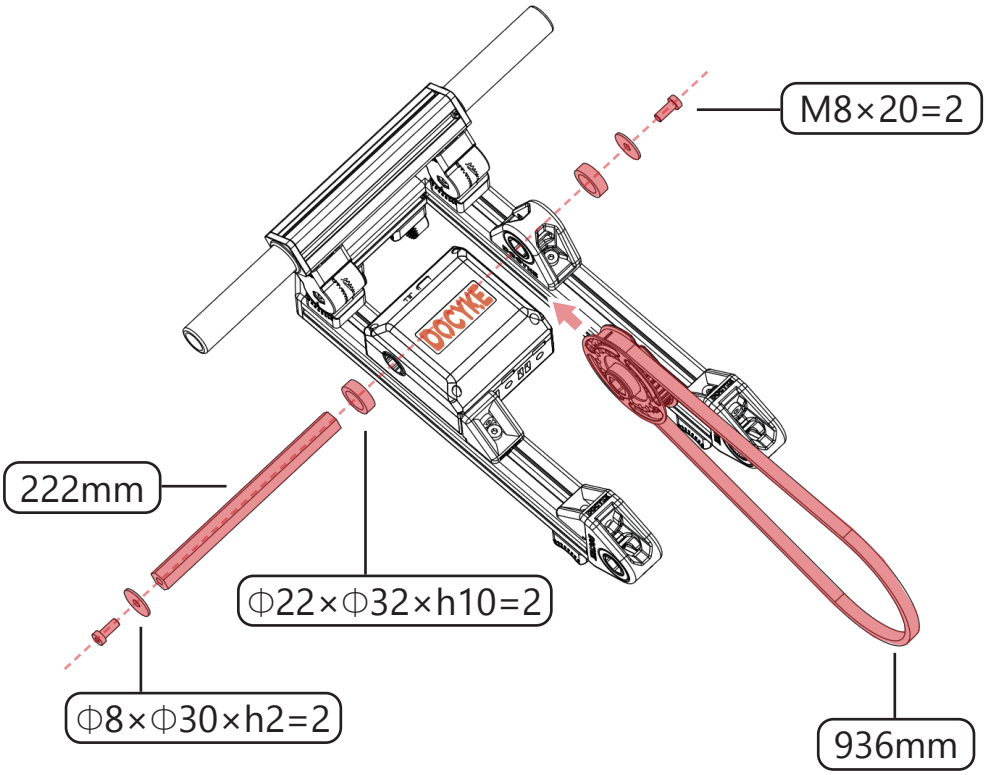
M8×20=2
222mm
Φ22×Φ32×h10=2
Φ8×Φ30×h2=2
936mm

D

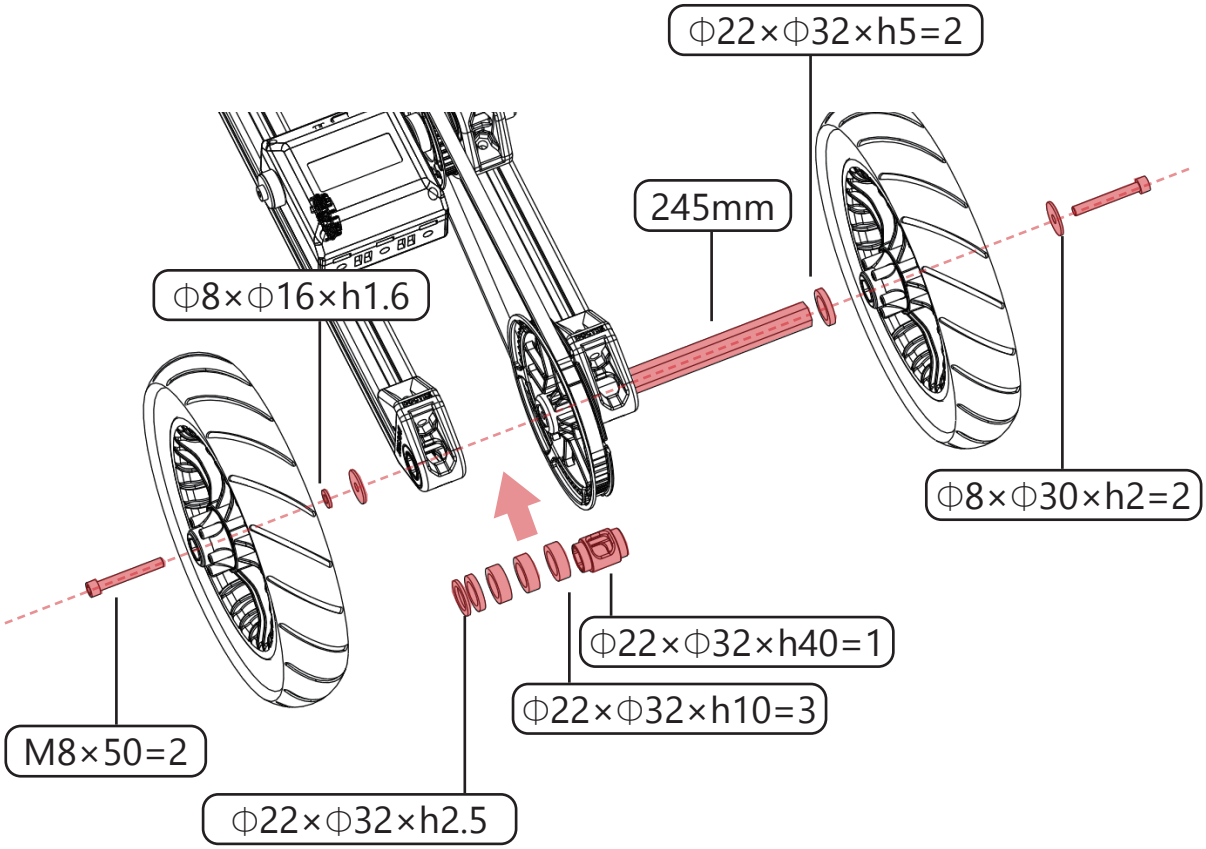
Φ22×Φ32×h5=2
245mm
Φ8×Φ16×h1.6
Φ8×Φ30×h2=2
Φ22×Φ32×h40=1
Φ22×Φ32×h10=3
M8×50=2
Φ22×Φ32×h2.5

E

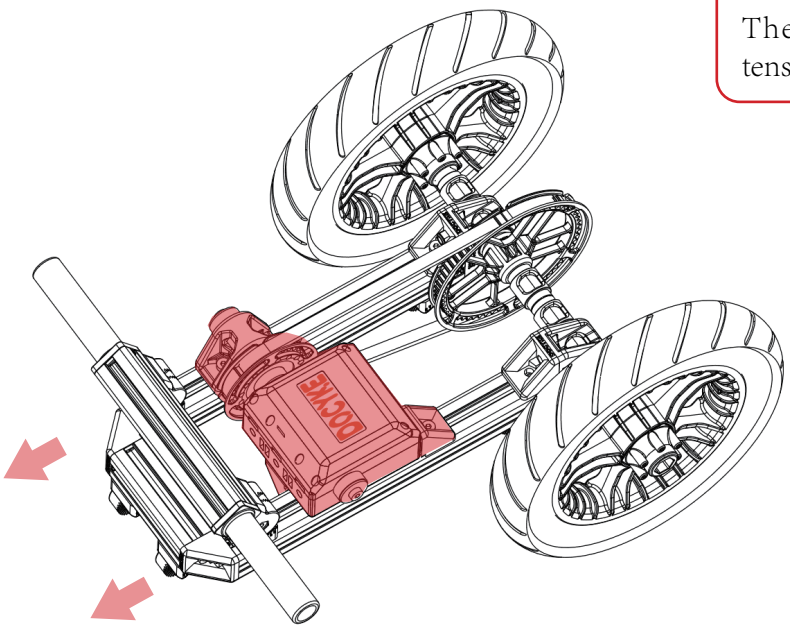

The toothed belt must be tensioned.

Tighten the bolts fully to prevent them from coming loose.

ASM.

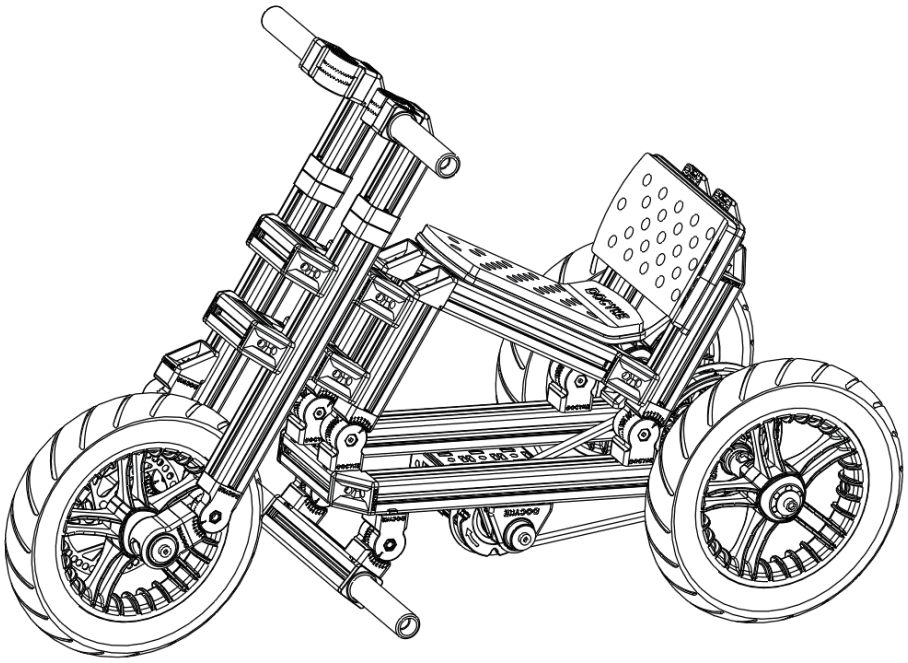

A

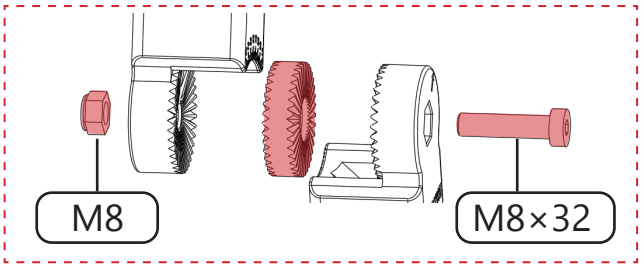

×4

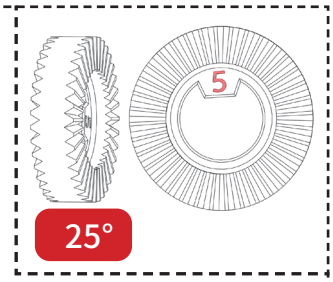

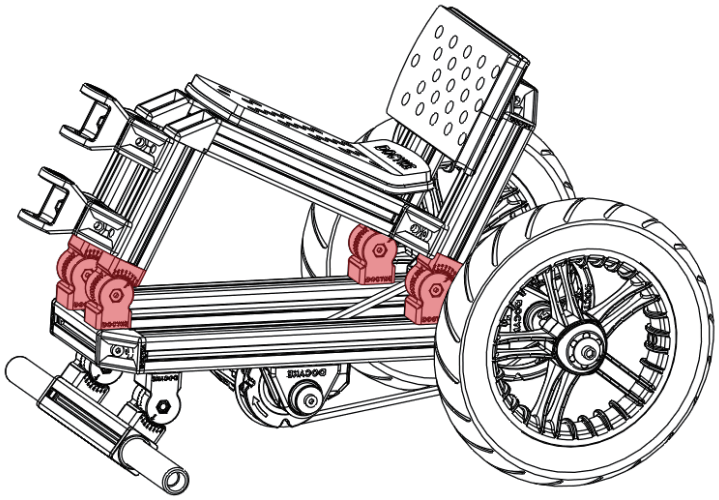

B

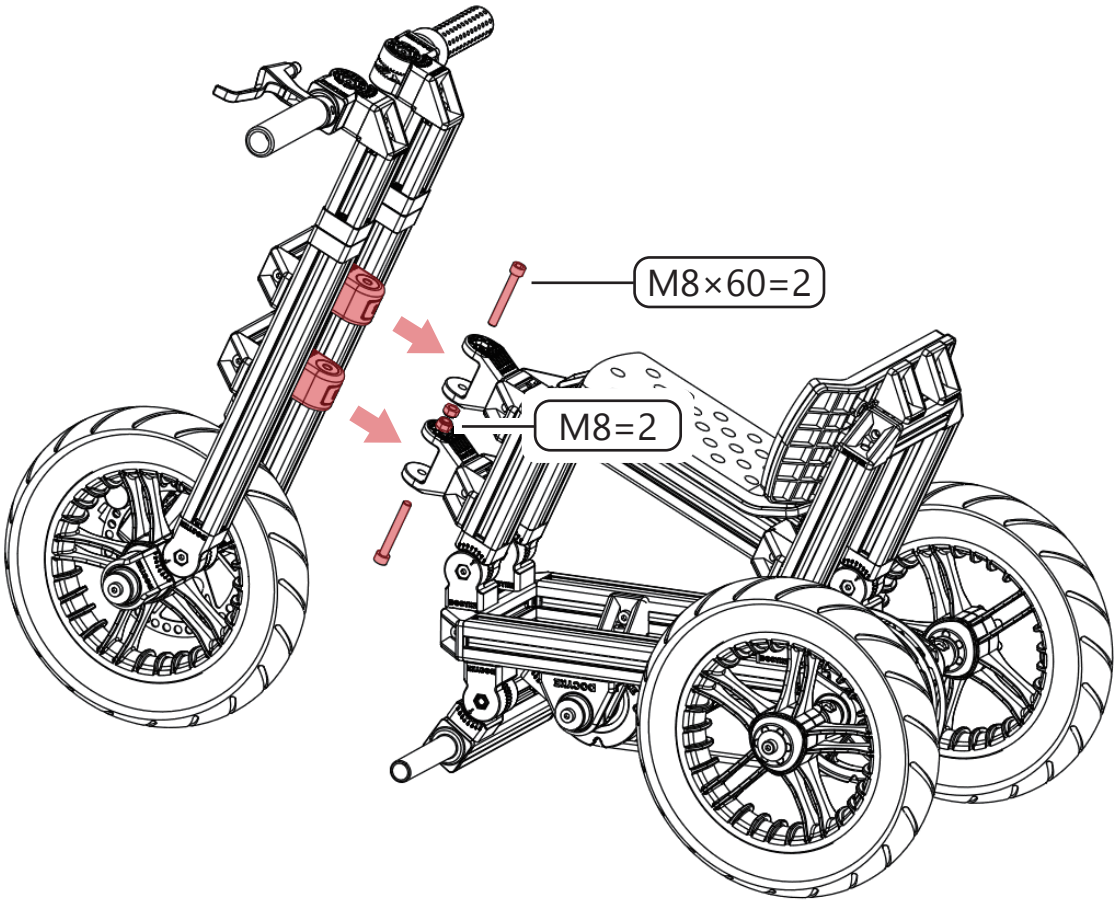

C

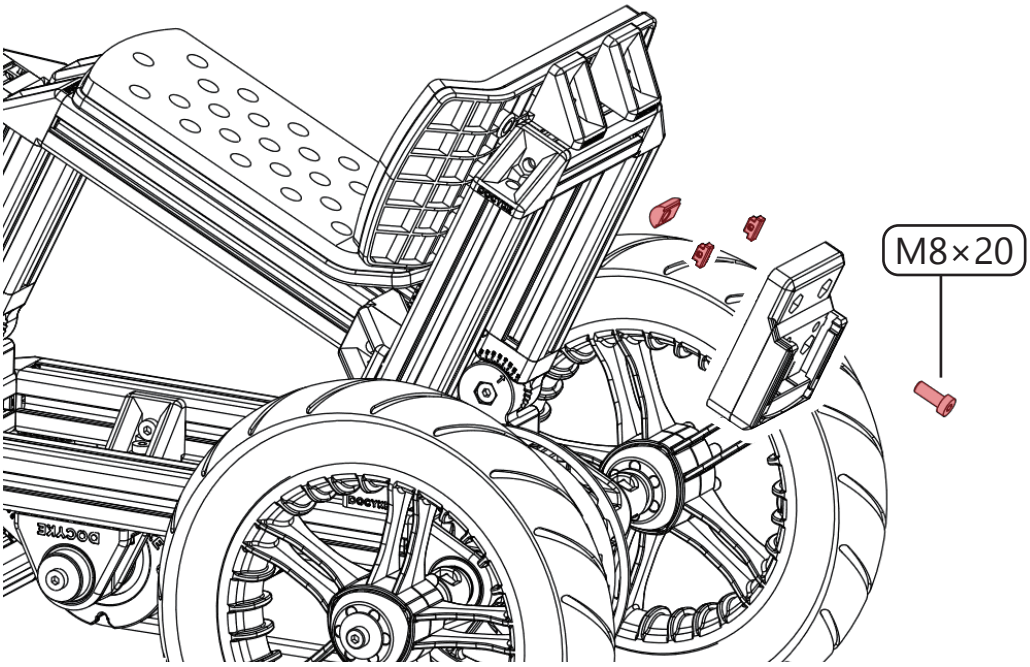

D

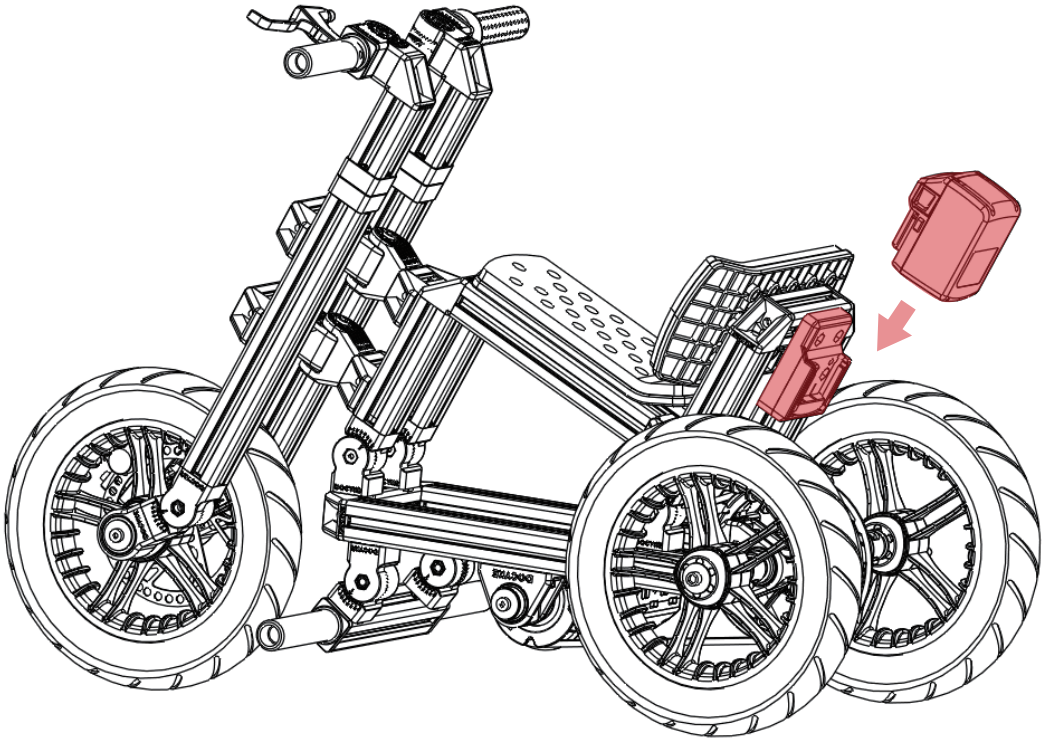

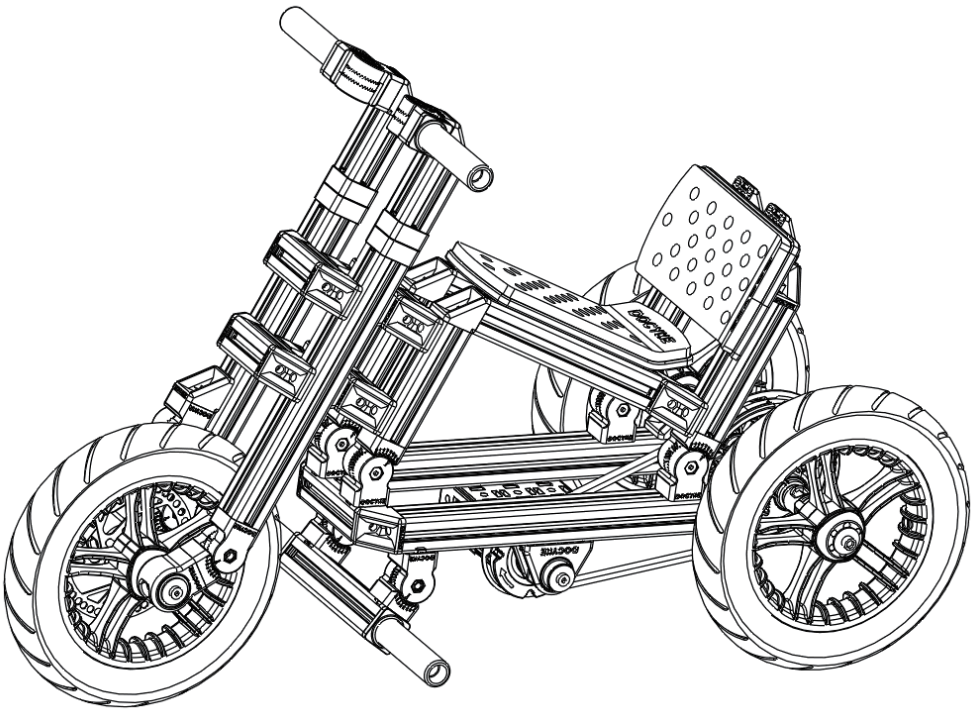

Brake kit

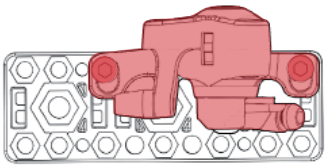

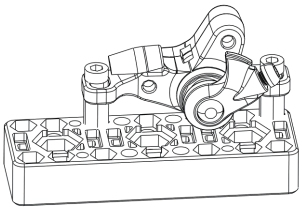

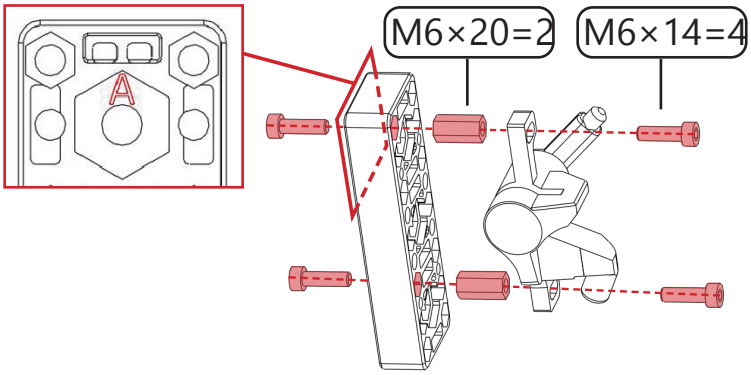

1

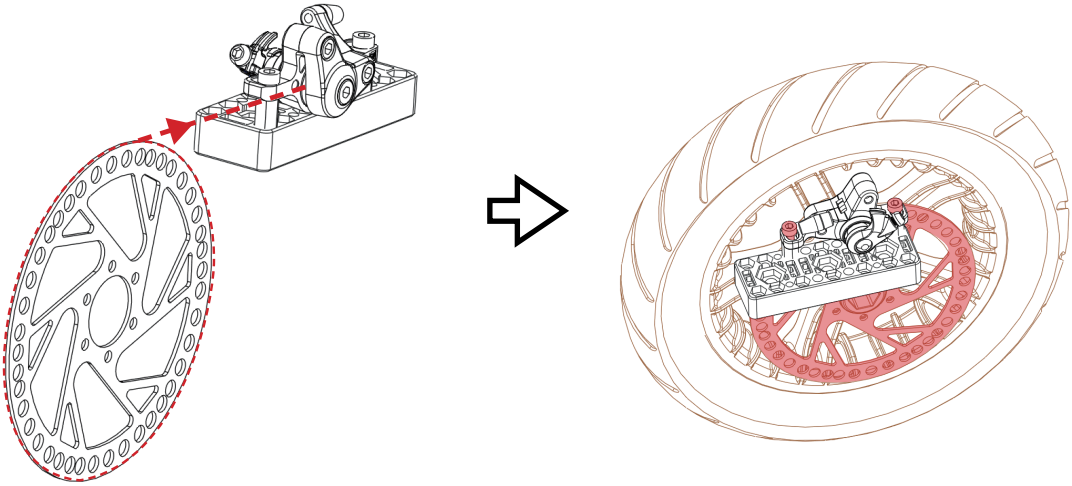

2

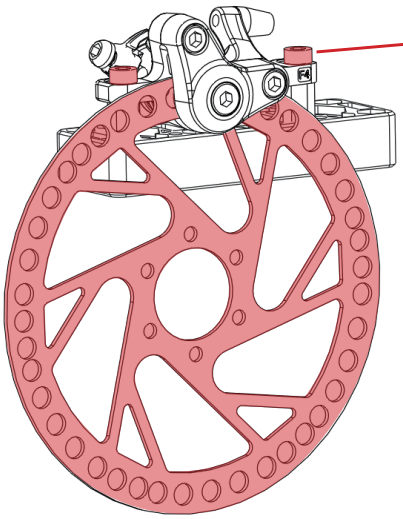

Adjust the gap between the brake disc and the brakes, then tighten the screws.

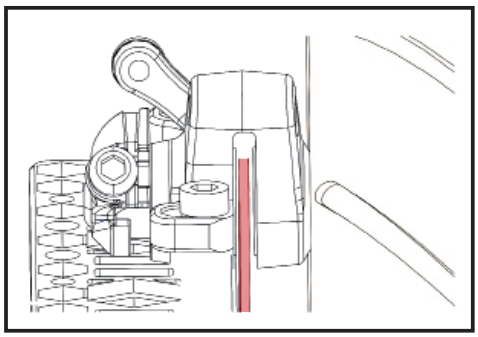

Secure the cable.

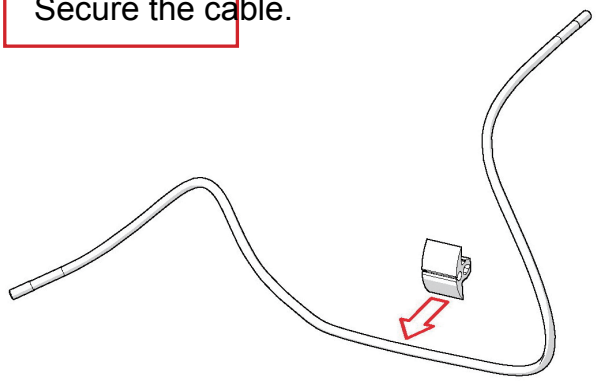

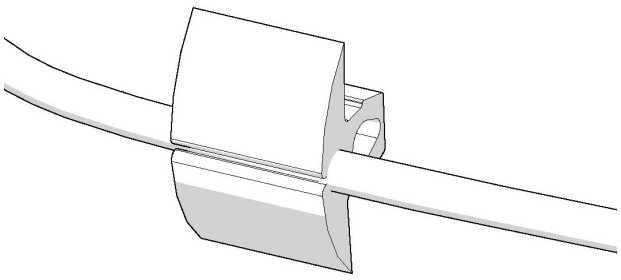

1

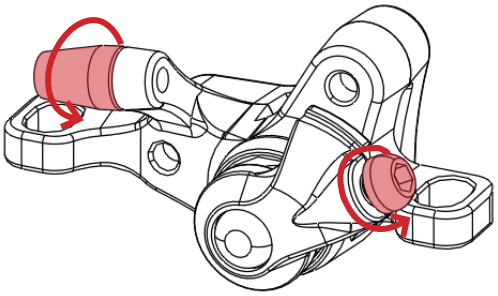

2

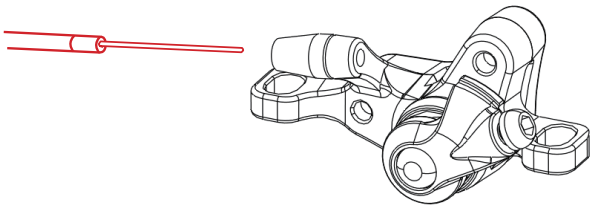

3

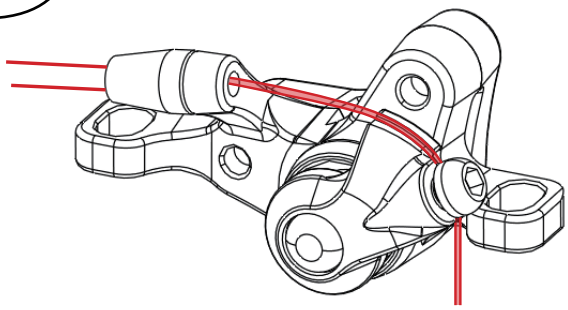

4

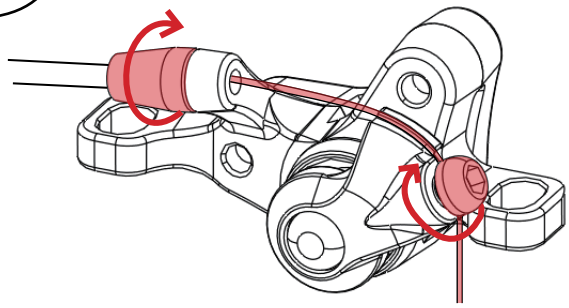

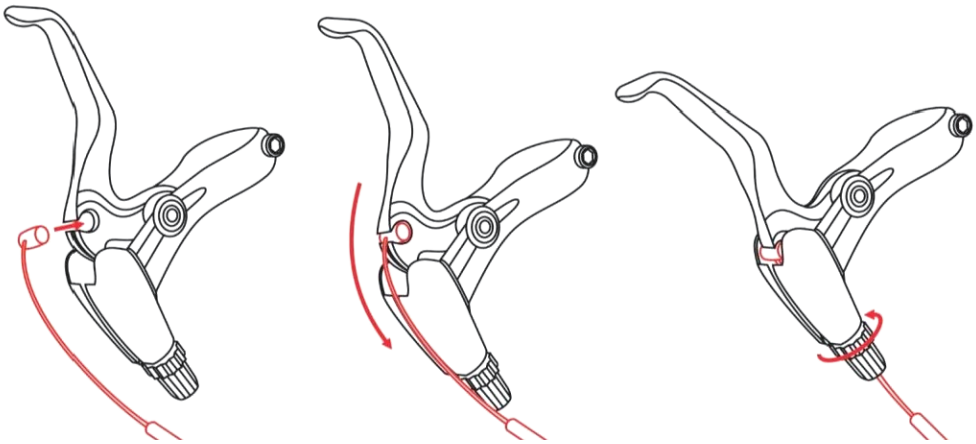

Electrical connection diagram

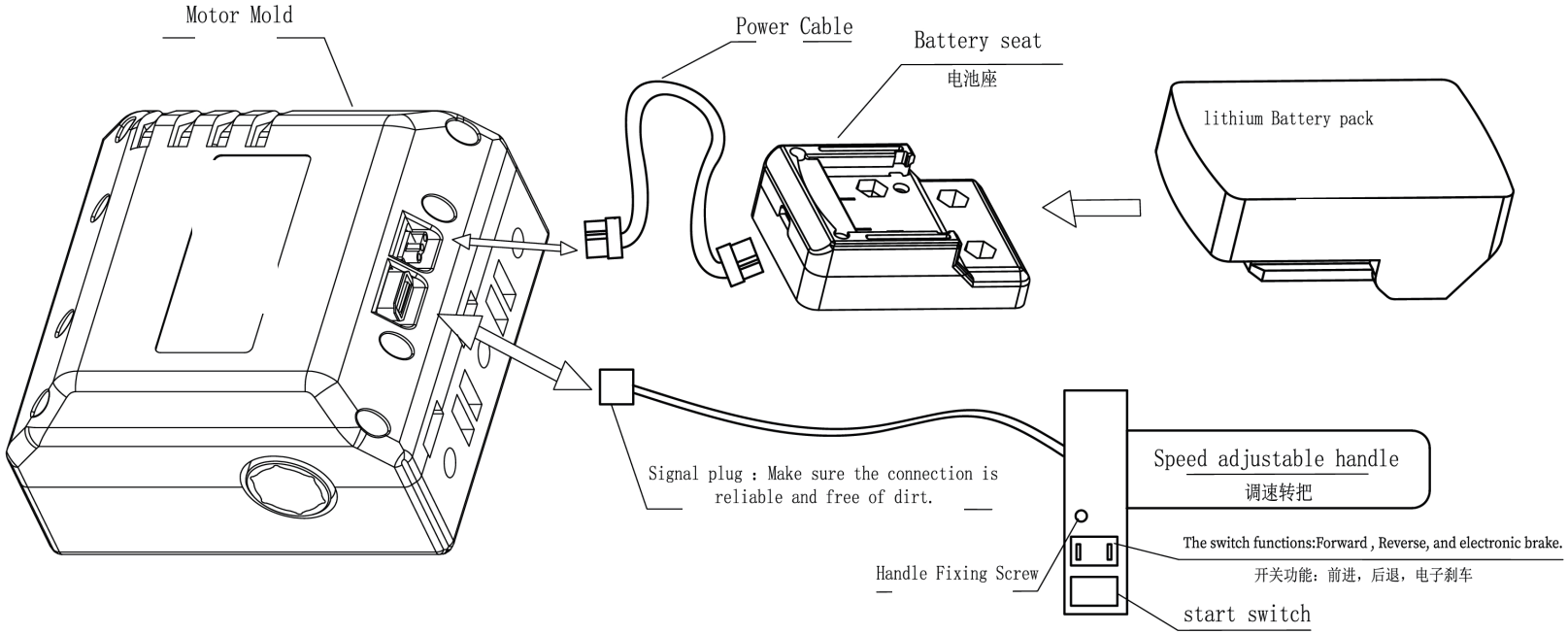

Introduction of High performance brushless motor

1. Safety protection (blocking , overheating , overcurrent , voltage protection)
2. Electronic brake (the F/R switch) .
3. Battery will enter the sleep mode for saving battery in 10 s.
4. Li_battery : 6AH (60 min)
5. Charger :110-240v /2A（3hours）.

BeyondPlay

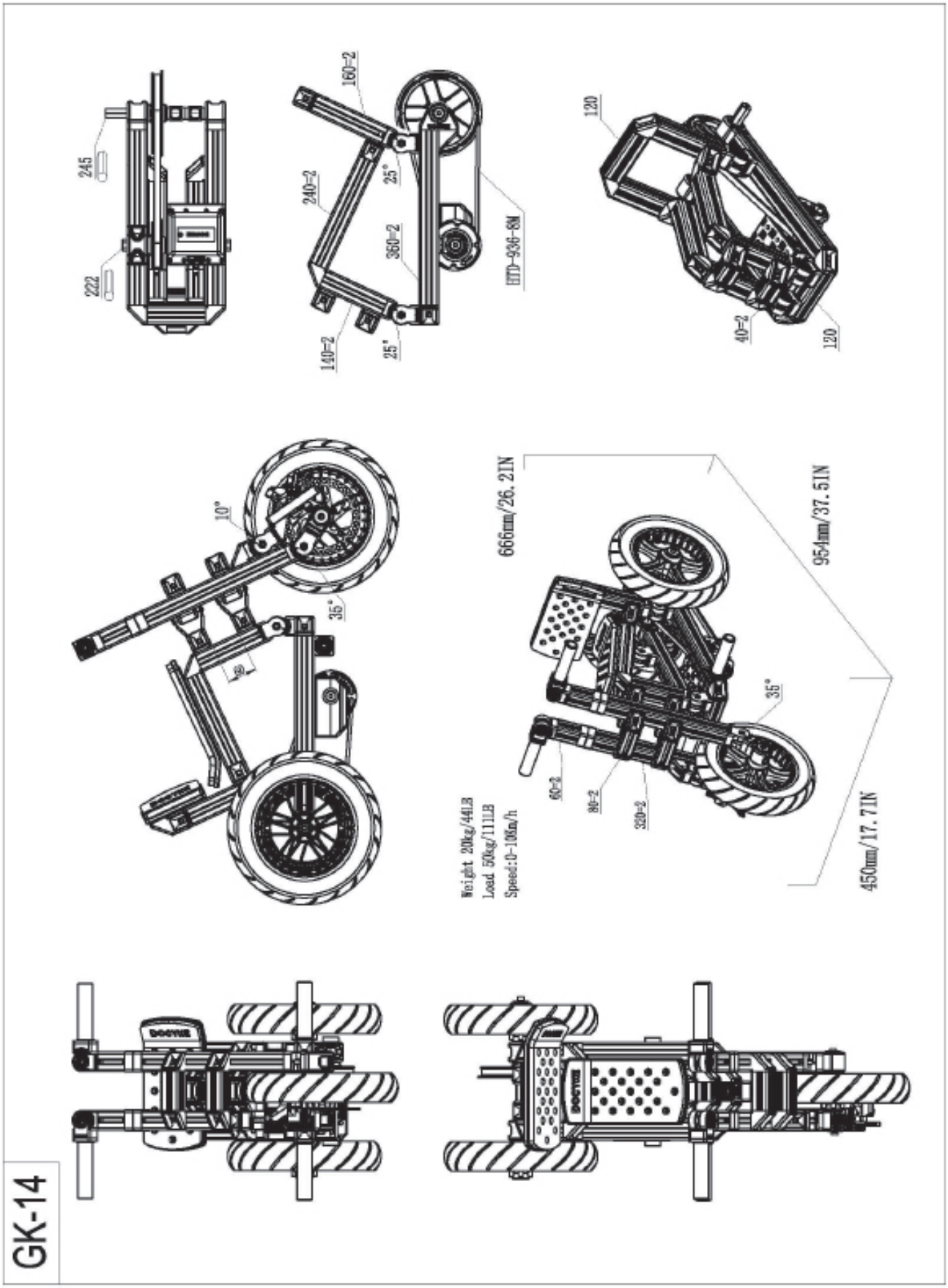
GK-14
245
222
160-2
240-2
25°
360-2
140-2
25°
HTD-936-8M
120
40-2
120
10°
35°
35°
666mm/26.21IN
954mm/37.51IN
Weight 200kg/441LB
Load 50kg/111LB
Speed:0-10Km/h
60-2
80-2
320-2
35°
450mm/17.71IN

Beyond Play

www.beyondplay.me